MCP1642B/D High-Current Synchronous Boost Converter Evaluation Board User's Guide

Note the following details of the code protection feature on Microchip devices:

- Microchip products meet the specification contained in their particular Microchip Data Sheet.
- Microchip believes that its family of products is one of the most secure families of its kind on the market today, when used in the intended manner and under normal conditions.
- There are dishonest and possibly illegal methods used to breach the code protection feature. All of these methods, to our knowledge, require using the Microchip products in a manner outside the operating specifications contained in Microchip's Data Sheets. Most likely, the person doing so is engaged in theft of intellectual property.
- Microchip is willing to work with the customer who is concerned about the integrity of their code.
- Neither Microchip nor any other semiconductor manufacturer can guarantee the security of their code. Code protection does not mean that we are guaranteeing the product as "unbreakable."

Code protection is constantly evolving. We at Microchip are committed to continuously improving the code protection features of our products. Attempts to break Microchip's code protection feature may be a violation of the Digital Millennium Copyright Act. If such acts allow unauthorized access to your software or other copyrighted work, you may have a right to sue for relief under that Act.

QUALITY MANAGEMENT SYSTEM CERTIFIED BY DNV

═ ISO/TS 16949 ═

Trademarks

ISBN: 978-1-63277-200-8

Microchip received ISO/TS-16949:2009 certification for its worldwide headquarters, design and wafer fabrication facilities in Chandler and Tempe, Arizona; Gresham, Oregon and design centers in California and India. The Company's quality system processes and procedures are for its PIC® MCUs and dsPIC® DSCs, KEELOQ® code hopping devices, Serial EEPROMs, microperipherals, nonvolatile memory and analog products. In addition, Microchip's quality system for the design and manufacture of development systems is ISO 9001:2000 certified.

Object of Declaration: MCP1642B/D High-Current Synchronous Boost Converter Evaluation Board

EU Declaration of Conformity

Manufacturer: Microchip Technology Inc.
2355 W. Chandler Blvd.
Chandler, Arizona, 85224-6199
USA

This declaration of conformity is issued by the manufacturer.

The development/evaluation tool is designed to be used for research and development in a laboratory environment. This development/evaluation tool is not a Finished Appliance, nor is it intended for incorporation into Finished Appliances that are made commercially available as single functional units to end users under EU EMC Directive 2004/108/EC and as supported by the European Commission's Guide for the EMC Directive 2004/108/EC (8th February 2010).

This development/evaluation tool complies with EU RoHS2 Directive 2011/65/EU.

This development/evaluation tool, when incorporating wireless and radio-telecom functionality, is in compliance with the essential requirement and other relevant provisions of the R&TTE Directive 1999/5/EC and the FCC rules as stated in the declaration of conformity provided in the module datasheet and the module product page available at www.microchip.com.

For information regarding the exclusive, limited warranties applicable to Microchip products, please see Microchip's standard terms and conditions of sale, which are printed on our sales documentation and available at www.microchip.com.

Signed for and on behalf of Microchip Technology Inc. at Chandler, Arizona, USA

Derek Carlson
VP Development Tools

12-Sep-14
Date

NOTES:

Table of Contents

NOTES:

Preface

NOTICE TO CUSTOMERS

All documentation becomes dated, and this manual is no exception. Microchip tools and documentation are constantly evolving to meet customer needs, so some actual dialogs and/or tool descriptions may differ from those in this document. Please refer to our web site (www.microchip.com) to obtain the latest documentation available.

Documents are identified with a "DS" number. This number is located on the bottom of each page, in front of the page number. The numbering convention for the DS number is "DSXXXXXXXXA", where "XXXXXXXX" is the document number and "A" is the revision level of the document.

For the most up-to-date information on development tools, see the MPLAB® IDE online help. Select the Help menu, and then Topics to open a list of available online help files.

INTRODUCTION

This chapter contains general information that will be useful to know before using the MCP1642B/D High-Current Synchronous Boost Converter Evaluation Board. Items discussed in this chapter include:

- Document Layout
- Conventions Used in this Guide
- Recommended Reading
- The Microchip Web Site
- Customer Support
- Document Revision History

DOCUMENT LAYOUT

This document describes how to use the MCP1642B/D High-Current Synchronous Boost Converter Evaluation Board as a development tool. The manual layout is as follows:

- **Chapter 1. "Product Overview"** – Important information about the MCP1642B/D High-Current Synchronous Boost Converter Evaluation Board.
- **Chapter 2. "Installation and Operation"** – Includes instructions on how to get started with this user's guide and a description of the user's guide.
- **Appendix A. "Schematic and Layouts"** – Shows the schematic and layout diagrams for the MCP1642B/D High-Current Synchronous Boost Converter Evaluation Board.
- **Appendix B. "Bill of Materials (BOM)"** – Lists the parts used to build the MCP1642B/D High-Current Synchronous Boost Converter Evaluation Board.

CONVENTIONS USED IN THIS GUIDE

This manual uses the following documentation conventions:

DOCUMENTATION CONVENTIONS

Description	Represents	Examples
Arial font:		
Italic characters	Referenced books	*MPLAB® IDE User's Guide*
	Emphasized text	...is the *only* compiler...
Initial caps	A window	the Output window
	A dialog	the Settings dialog
	A menu selection	select Enable Programmer
Quotes	A field name in a window or dialog	"Save project before build"
Underlined, italic text with right angle bracket	A menu path	*File>Save*
Bold characters	A dialog button	Click **OK**
	A tab	Click the **Power** tab
N'Rnnnn	A number in verilog format, where N is the total number of digits, R is the radix and n is a digit.	4'b0010, 2'hF1
Text in angle brackets < >	A key on the keyboard	Press <Enter>, <F1>
Courier New font:		
Plain Courier New	Sample source code	`#define START`
	Filenames	`autoexec.bat`
	File paths	`c:\mcc18\h`
	Keywords	`_asm, _endasm, static`
	Command-line options	`-Opa+, -Opa-`
	Bit values	`0, 1`
	Constants	`0xFF, 'A'`
Italic Courier New	A variable argument	*`file`*`.o`, where *`file`* can be any valid filename
Square brackets [ ]	Optional arguments	`mcc18 [options]` *`file`* `[options]`
Curly brackets and pipe character: { | }	Choice of mutually exclusive arguments; an OR selection	`errorlevel {0|1}`
Ellipses...	Replaces repeated text	`var_name [, var_name...]`
	Represents code supplied by user	`void main (void) { ... }`

RECOMMENDED READING

This user's guide describes how to use the MCP1642B/D High-Current Synchronous Boost Converter Evaluation Board. Other useful documents are listed below. The following Microchip documents are available and recommended as supplemental reference resources.

- **MCP1642B/D Data Sheet – *"1.8A Input Current Switch, 1 MHz Low-Voltage Start-Up Synchronous Boost Regulator"* (DS20005253)**

THE MICROCHIP WEB SITE

Microchip provides online support via our web site at www.microchip.com. This web site is used as a means to make files and information easily available to customers. Accessible by using your favorite Internet browser, the web site contains the following information:

- **Product Support** – Data sheets and errata, application notes and sample programs, design resources, user's guides and hardware support documents, latest software releases and archived software
- **General Technical Support** – Frequently Asked Questions (FAQs), technical support requests, online discussion groups, Microchip consultant program member listing
- **Business of Microchip** – Product selector and ordering guides, latest Microchip press releases, listing of seminars and events, listings of Microchip sales offices, distributors and factory representatives

CUSTOMER SUPPORT

Users of Microchip products can receive assistance through several channels:

- Distributor or Representative
- Local Sales Office
- Field Application Engineer (FAE)
- Technical Support

Customers should contact their distributor, representative or field application engineer (FAE) for support. Local sales offices are also available to help customers. A listing of sales offices and locations is included in the back of this document.

Technical support is available through the web site at:
http://www.microchip.com/support.

DOCUMENT REVISION HISTORY

Revision A (March 2015)

- Initial Release of this Document.

NOTES:

Chapter 1. Product Overview

1.1 INTRODUCTION

This chapter provides an overview of the MCP1642B/D High-Current Synchronous Boost Converter Evaluation Board and covers the following topics:

- MCP1642B/D Device overview.
- What is the MCP1642B/D High-Current Synchronous Boost Converter Evaluation Board?
- Contents of the MCP1642B/D High-Current Synchronous Boost Converter Evaluation Board.

1.2 MCP1642B/D DEVICE OVERVIEW

The MCP1642B/D are compact, high-efficiency, fixed frequency, step-up DC-DC converters. These products provide an easy-to-use power supply solution, with a minimum number of external components for applications powered by one-cell, two-cell or three-cell alkaline, NiCd, NiMH, one-cell Li-Ion or Li-Polymer batteries.

The MCP1642B/D operates in Pulse-Width Modulation (PWM), at a fixed 1 MHz switching frequency, has a wide input voltage range, from 0.35 to 5.5V (with typically 0.65V start-up voltage at 1 mA load current).

The device is available in an 8-Lead MSOP package and an 8-Lead 2 x 3 mm DFN package. Also, there are two shutdown options for the MCP1642B/D family:

- Output Disconnect mode (MCP1642B)
- Input-to-Output Bypass mode (MCP1642D)

For the fixed output voltage option of the MCP1642B/D devices, the feedback pin (V_{FB}) is not connected. The output voltage is set by an internal feedback divider. The available fixed output values are 1.8V, 3.0V, 3.3V, 5V.

TABLE 1-1: PART NUMBER SELECTION BY SHUTDOWN OPTION

Part Number	True Output Disconnect	Input to output bypass
MCP1642B-ADJ (or -18; 30; 33; 50)	X	—
MCP1642D-ADJ (or -18; 30; 33; 50)	—	X

On the MCP1642B/D High-Current Synchronous Boost Converter Evaluation Board, the following options are used:

- MCP1642D-33 in DFN-8 package
- MCP1642B-ADJ in MSOP-8 package

The goal of the MCP1642B/D High-Current Synchronous Boost Converter Evaluation Board is to demonstrate the high output current capabilities of the MCP1642B/D devices.

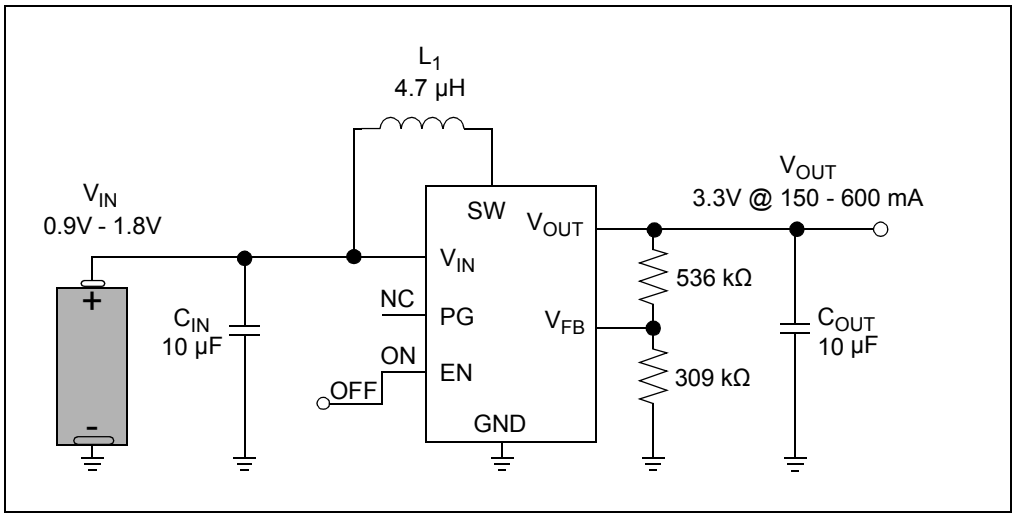

FIGURE 1-1: *Typical MCP1642B/D Boost Converter Single Cell Battery Input.*

1.3 WHAT IS THE MCP1642B/D HIGH-CURRENT SYNCHRONOUS BOOST CONVERTER EVALUATION BOARD?

The MCP1642B/D High-Current Synchronous Boost Converter Evaluation Board is used to evaluate and demonstrate Microchip's MCP1642B/D products. The board can be used to evaluate both package options (MSOP-8 and 2 x 3 mm DFN-8). The MCP1642B/D High-Current Synchronous Boost Converter Evaluation Board was developed to help engineers reduce the product design cycle time.

The output voltage for the applications using MCP1642B/D-ADJ can be set using the external resistor divider.

The converter can be disabled by tying the Enable pin (EN) to ground (GND).

When disabled:

- MCP1642B disconnects the path from input to output for "true-disconnect".
- MCP1642D connects the input to the output, using the internal P-Channel MOSFET. During the bypass operation, the P-Channel current limit is disabled, and the load current should be kept below 800 mA.

When enabled, the MCP1642B/D will regulate the output voltage.

1.4 CONTENTS OF THE MCP1642B/D HIGH-CURRENT SYNCHRONOUS BOOST CONVERTER EVALUATION BOARD

The MCP1642B/D High-Current Synchronous Boost Converter Evaluation Board includes:

- MCP1642B/D High-Current Synchronous Boost Converter Evaluation Board (ADM00460)
- Information Sheet

Chapter 2. Installation and Operation

2.1 INTRODUCTION

The MCP1642B/D are compact, high-efficiency, fixed frequency, synchronous step-up DC-DC converters. These products provide an easy-to-use power supply solution for applications powered by either one-cell, two-cell or three-cell alkaline, NiCd, NiMH, one-cell Li-Ion or Li-Polymer batteries.

The MCP1642B/D is capable of regulating the output voltage over a wide 1.8V to 5.5V range and typically can deliver over 400 mA of load current at 3.3V output when supplied from a single 1.5V cell. The regulated output voltage, V_{OUT}, should be greater than the input voltage, V_{IN}.

The devices are available in MSOP-8 and 2 x 3 mm DFN-8 lead packages.

MCP1642B/D High-Current Synchronous Boost Converter Evaluation Board offers both package types in two boost-converter applications for 3.3V and 5.0V output voltage.

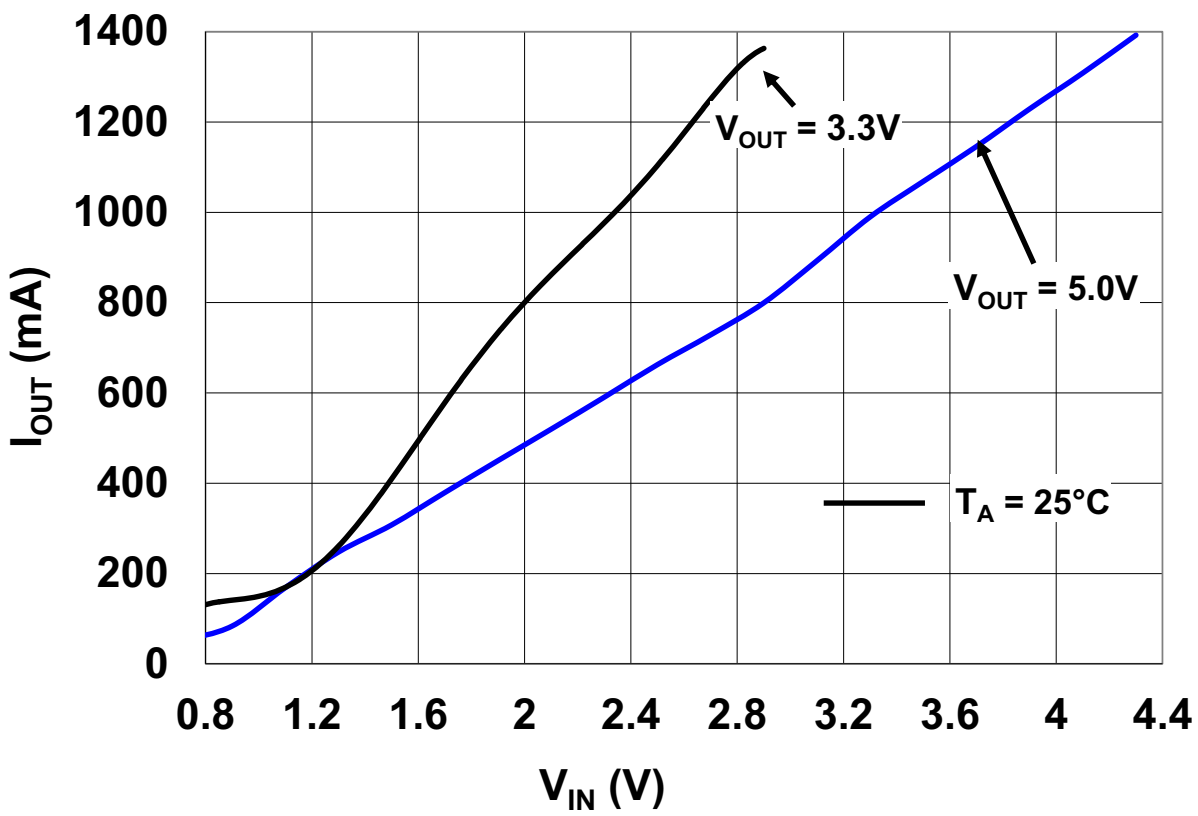

Note: Measurements were obtained using power supply.

FIGURE 2-1: *MCP1642B/D Maximum I_{OUT} Vs. V_{IN} with Maximum 10% Output Drop.*

2.1.1 Battery Considerations

When considering a power solution for a design the battery needs to be carefully selected. Alkaline batteries are a commonly available option that delivers good performance in a variety of applications. Energizer® Ultimate Lithium batteries are an alternative power solution that provides superior performance high drains and allows designers to utilize the full power range of the MCP1642B/D without sacrificing size or runtime.

Energizer Ultimate Lithium batteries utilize a primary cell chemistry that contains higher energy than alkaline batteries and has much better high-drain performance. Ultimate Lithium batteries produce a high, flat voltage profile that enables them to provide a high energy capacity even at high drains. Additionally, Ultimate Lithium batteries have a very low internal resistance, allowing them to maintain a high voltage at very high loads.

2.1.2 MCP1642B/D High-Current Synchronous Boost Converter Evaluation Board Features

The MCP1642B/D High-Current Synchronous Boost Converter Evaluation Board has the following features:

- Start-up voltage: 0.65V at V_{OUT} = 3.3V and I_{OUT} = 1mA, resistive load
- Input voltage range after start-up, V_{IN}: 0.35V up to V_{OUT} – 200-300 mV recommended headroom
- Adjustable output voltage range: 1.8V to 5.5V, set by a resistor divider on board (bottom application using MCP1642B-ADJ)
- Fixed 3.3V output voltage (using the fixed output voltage MCP1642D-33)
- Output current: typical 200 mA @ 3.3V Output, 1.2V Input or 800 mA @ 5.0V Output, 3V Input
- Output Disconnect (MCP1642B)
- Input-Output Bypass (MCP1642D)
- PWM Operation
- PWM Switching Frequency = 1 MHz
- Enable state, Power Good, Switch test points on board
- Peak Input Current Limit of 1.8A
- Overtemperature protection (if the die temperature exceeds +150°C, +35°C hysteresis)

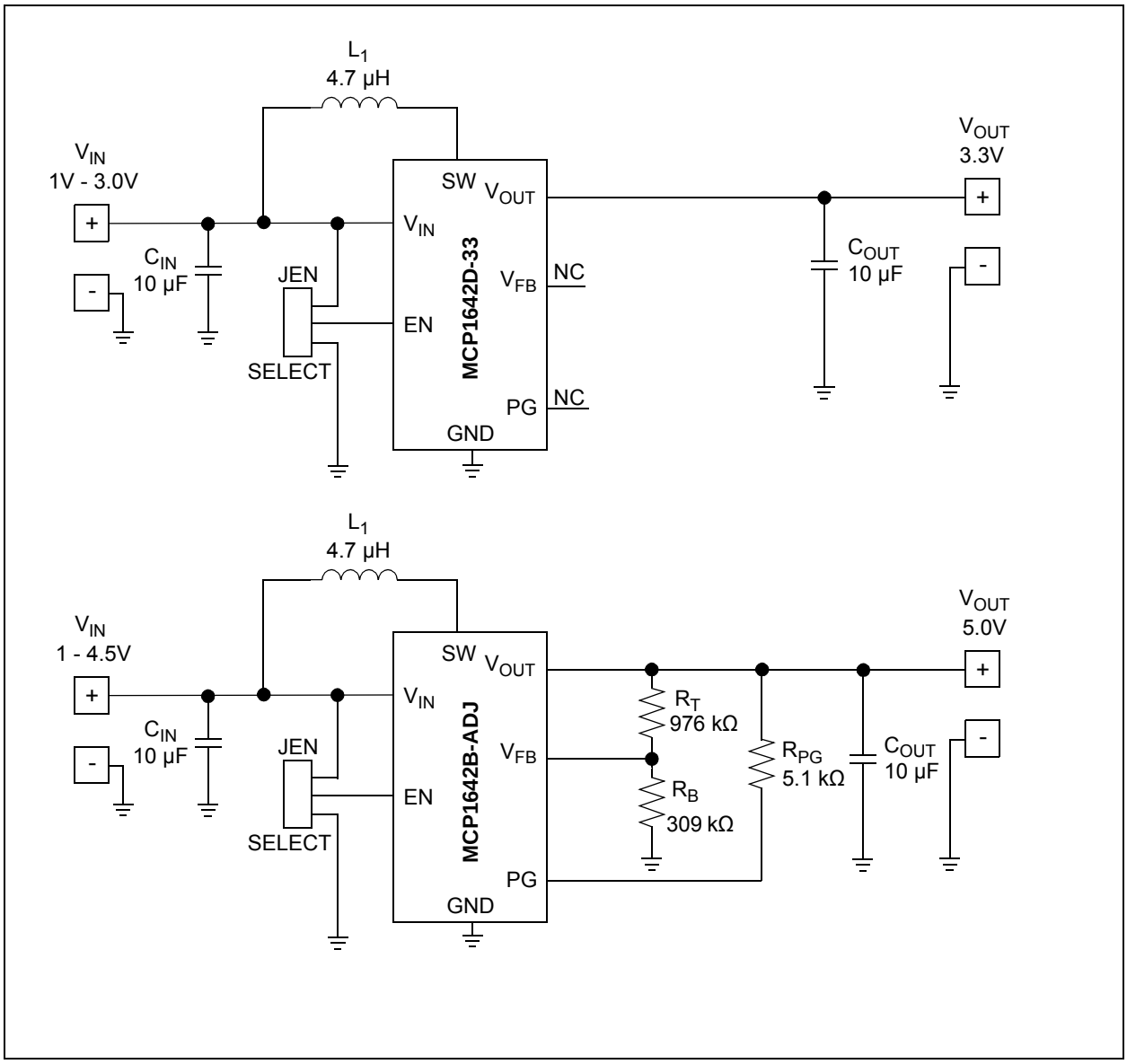

FIGURE 2-2: *MCP1642B/D Synchronous Boost Applications.*

2.2 GETTING STARTED

The MCP1642B/D High-Current Synchronous Boost Converter Evaluation Board is fully assembled and tested to evaluate and demonstrate the MCP1642B/D Switching Boost Regulators. For in-depth evaluation, this board requires the use of external lab supplies and load.

2.2.1 Power Input and Output Connection

2.2.1.1 POWERING THE MCP1642B/D HIGH-CURRENT SYNCHRONOUS BOOST CONVERTER EVALUATION BOARD

Soldered test points are available for input voltage connections. The maximum input voltage should not exceed the output voltage. The output voltage will not remain in regulation for input voltages that are greater than the output voltage.

The MCP1642B/D High-Current Synchronous Boost Converter Evaluation Board has two independent circuit applications, one using the MCP1642B-ADJ MSOP-8 package, while the other one uses the MCP1642D-33 DFN-8 package.

Soldered test points are available to connect a load. The switch peak current limit will provide a safe maximum current value. The maximum output current for the converters will vary with input and output voltages; refer to Figure 2-1 or the MCP1642B/D data sheet for more information on the maximum output current.

2.2.1.2 BOARD POWER-UP PROCEDURE

1. Connect the power supply/battery as shown in Figure 2-3. The positive terminal must be connected to V_{IN} and the negative terminal to GND.
2. The enable pin (EN) is by default connected to V_{IN} and, in this situation the converter is enabled and the output voltage can be measured on the V_{OUT} and GND terminals. To put the device in Shutdown mode, connect the EN pin to GND, by putting the jumper on the first two pins of J9 and J10, respectively.
3. Connect system load to V_{OUT} and GND terminals; maximum load varies with input and output voltage. Connect the (+) side of the load to V_{OUT} and the negative (-) load to ground (GND).
4. Additional test points are available to visualize different signals (SW, PG, EN).

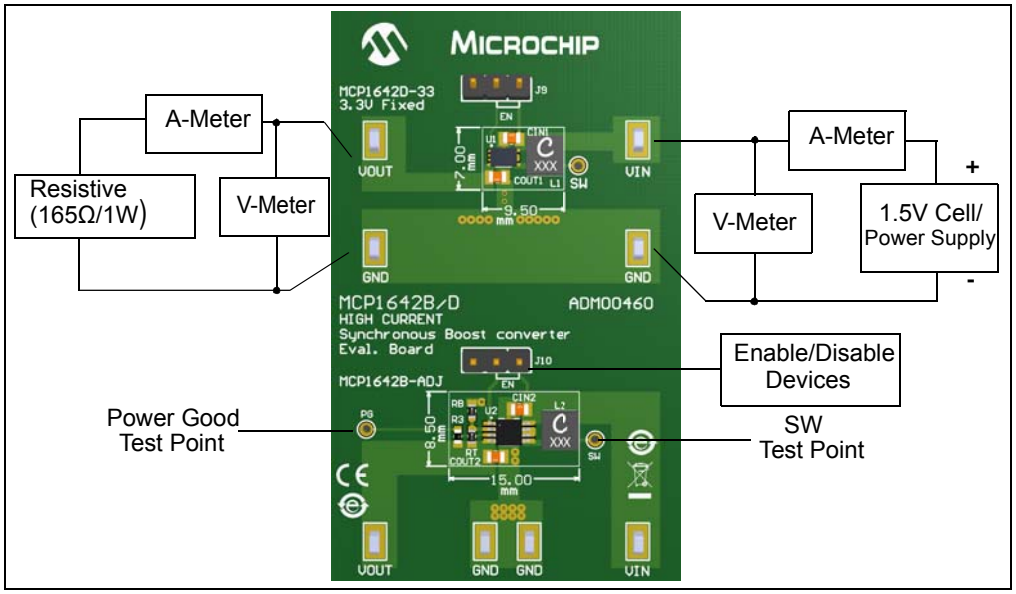

FIGURE 2-3: *MCP1642 Evaluation Board Setup.*

2.2.1.3 ADJUSTABLE V_{OUT} SETTING

The resistor divider R_T and R_B is used to set the converter output voltage. The output voltage can be calculated using Equation 2-1.

EQUATION 2-1:

$$R_T = R_B \times \left[\left(\frac{V_{OUT}}{V_{FB}} \right) - 1 \right]$$

Where: V_{FB} = 1.21V

NOTES:

Appendix A. Schematic and Layouts

A.1 INTRODUCTION

This appendix contains the following schematics and layouts for the MCP1642 High-Current Low Start-up Voltage Synchronous Boost Converter Evaluation Board:

- Board – Schematic
- Board – Top Silk and Pads
- Board – Top Copper and Silk
- Board – Top Copper
- Board – Bottom Copper

A.2 BOARD – SCHEMATIC

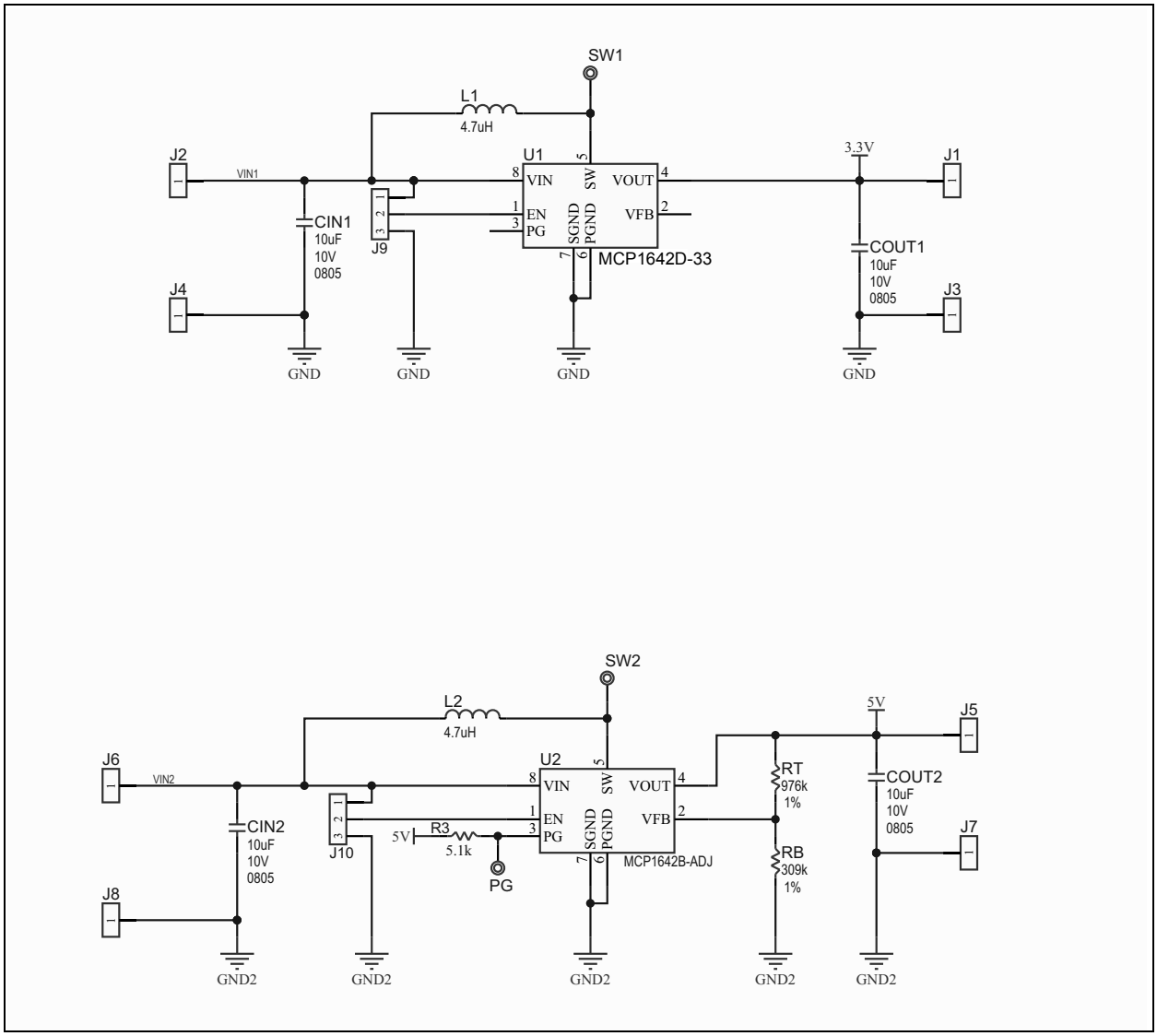

A.3 BOARD – TOP SILK AND PADS

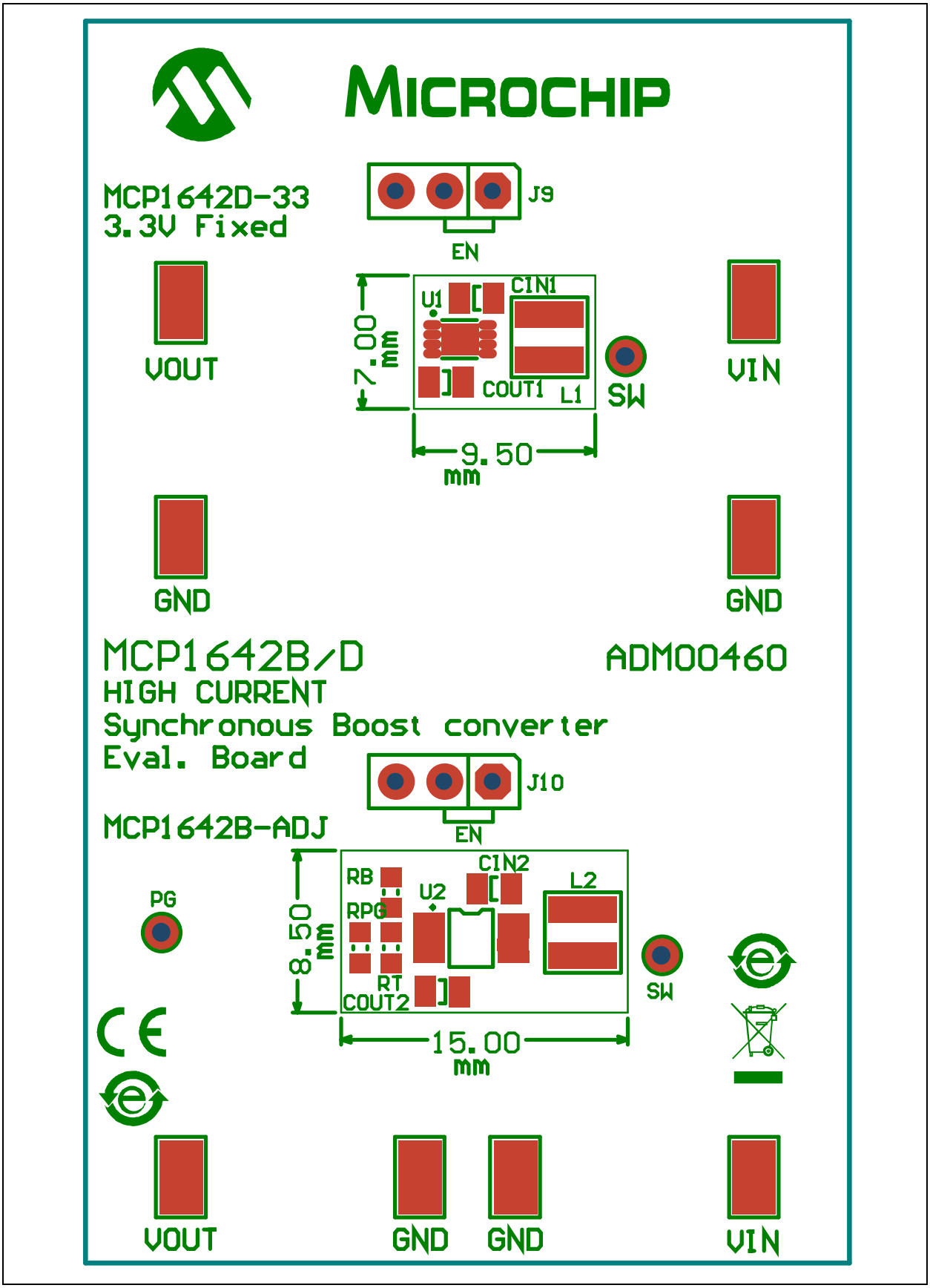

A.4 BOARD – TOP COPPER AND SILK

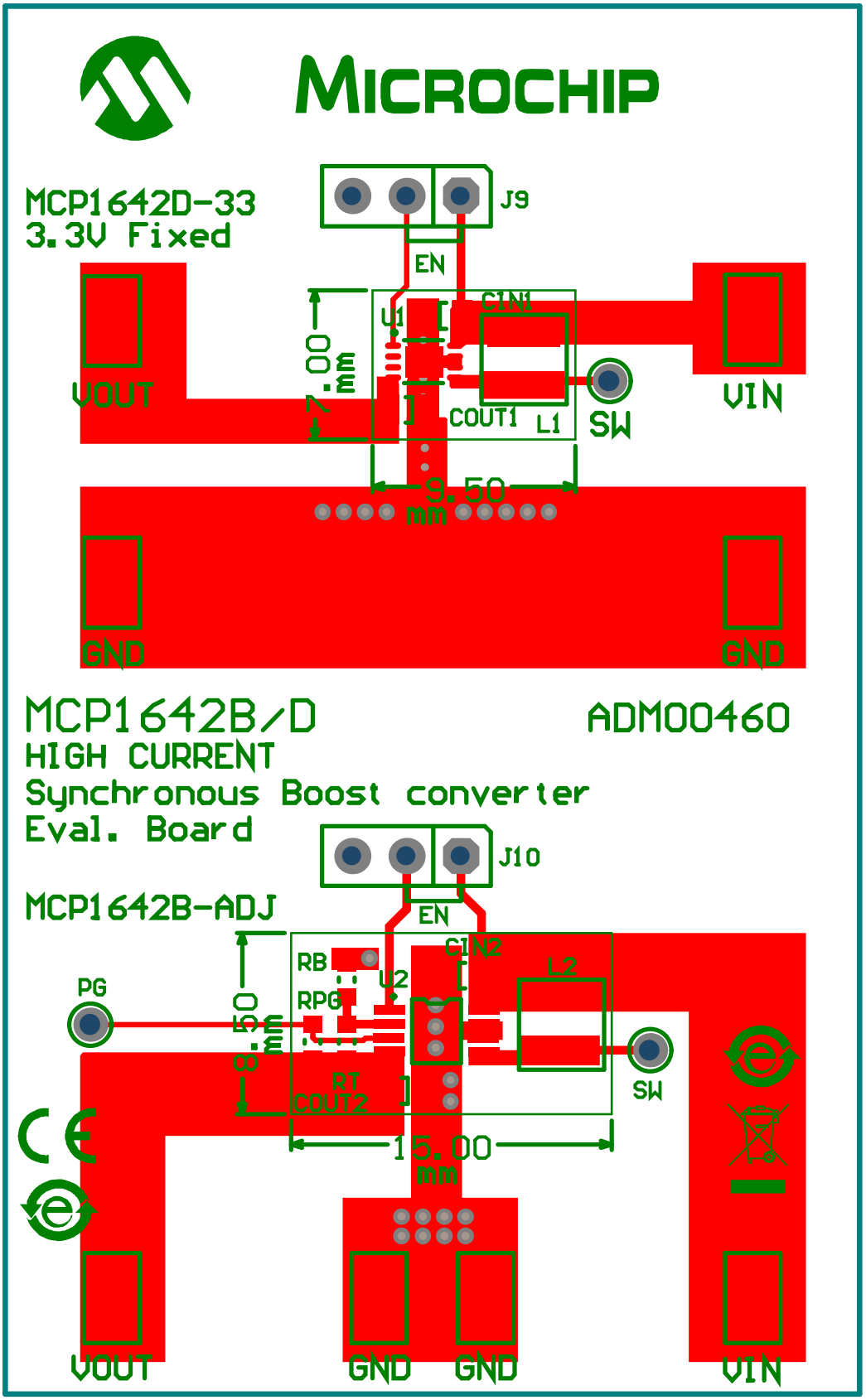

A.5 BOARD – TOP COPPER

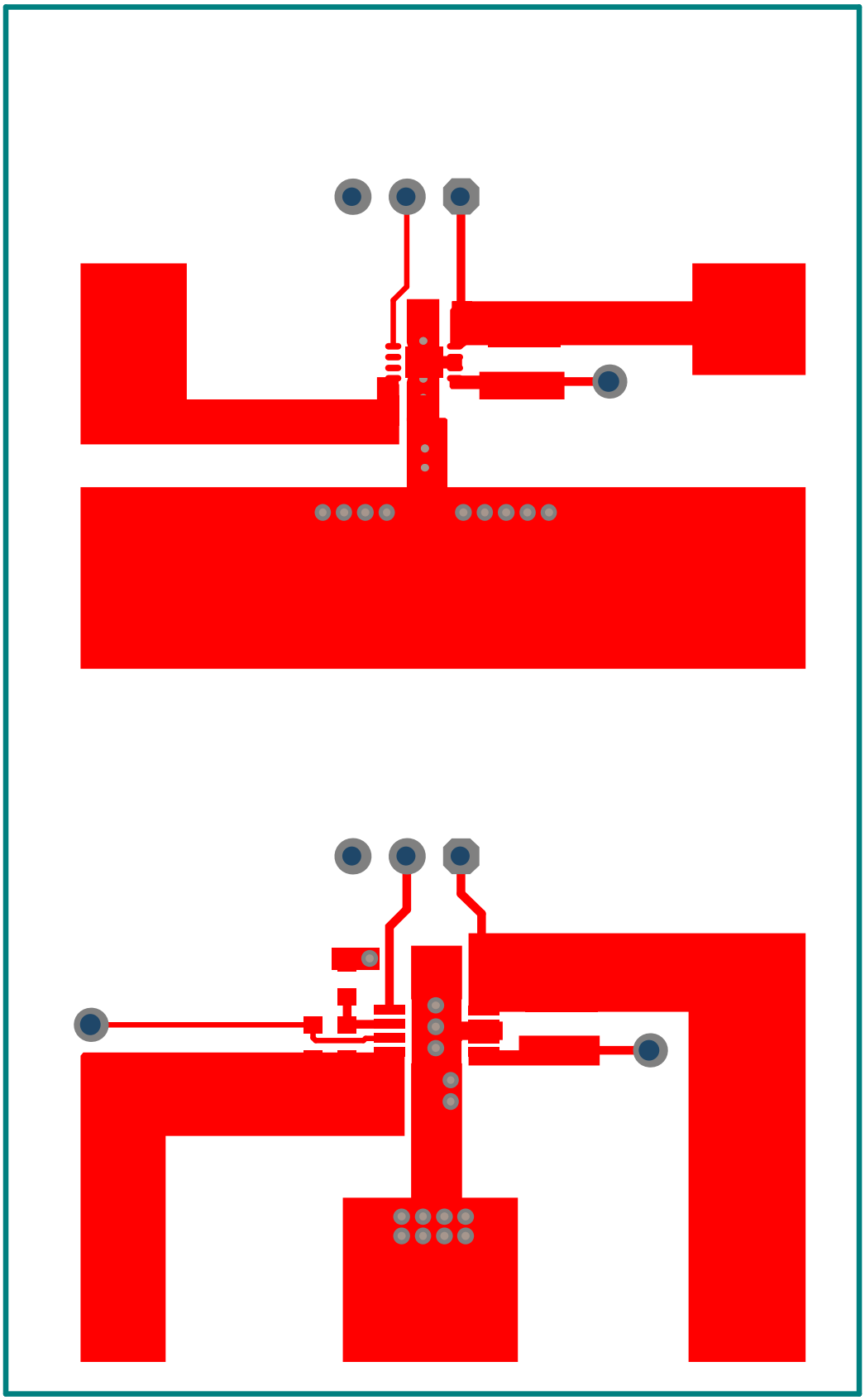

A.6 BOARD – BOTTOM COPPER

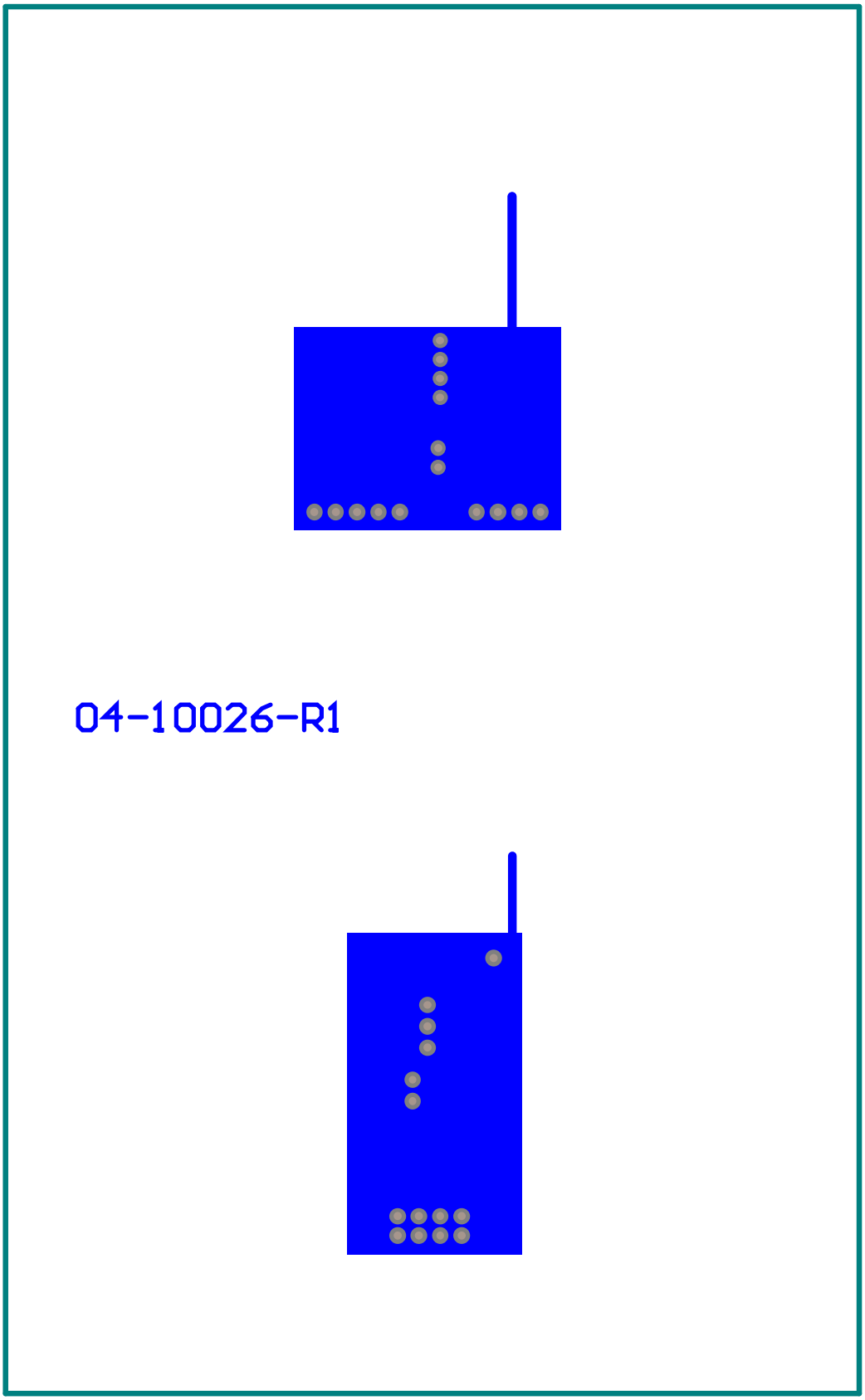

Appendix B. Bill of Materials (BOM)

TABLE B-1: BILL OF MATERIALS (BOM)

Qty.	Reference	Description	Manufacturer	Part Number
4	Bump	Bumpon CYLINDRICAL 44X.20 White	3M	SJ-5003
4	CIN1, CIN2, COUT1, COUT2	CAP CER 10 µF 10V 10% X7R 0805	TDK Corporation	C2012X7R1A106K125AC
8	J1, J2, J3, J4, J5, J6, J7, J8	CON TP LOOP Tin SMD	Harwin Plc.	S1751-46R
2	J9, J10	CONN HDR Male 100 1x3-POS VERT	FCI	68000-103HLF
2	JP1, JP2	MECH HW JUMPER 2.54 mm 1x2 Handle Gold	TE Connectivity, Ltd.	881545-2
2	L1, L2	INDUCTOR 4.7 µH 2A 20% SMD XFL4020	Coilcraft	XFL4020-472MEB
1	PCB	MCP1642D/B – Printed Circuit Board	Microchip Technology Inc.	104-10026
1	R3	RES 5.1 kΩ 1/10W 1% 0603 SMD	Panasonic® – ECG	ERJ-3EKF5101V
1	RB	RES 309 kΩ 1/10W 1% 0603 SMD	Panasonic – ECG	ERJ-3EKF3093V
1	RT	RES 976 kΩ 1/10W 1% 0603 SMD	Panasonic – ECG	ERJ-3EKF9763V
1	U1	MCHP ANALOG SWITCHER Boost 3.3V MCP1642D-DFN	Microchip Technology Inc.	MCP1642D-33I/MC
1	U2	MCHP ANALOG SWITCHER Boost 5.0V MCP1642B-ADJ	Microchip Technology Inc.	MCP1642B-ADJI/MS

Note: The components listed in this Bill of Materials are representative of the PCB assembly. The released BOM used in manufacturing uses all RoHS-compliant components.

NOTES:

Worldwide Sales and Service

AMERICAS

Corporate Office
2355 West Chandler Blvd.
Chandler, AZ 85224-6199
Tel: 480-792-7200
Fax: 480-792-7277
Technical Support:
http://www.microchip.com/support
Web Address:
www.microchip.com

Atlanta
Duluth, GA
Tel: 678-957-9614
Fax: 678-957-1455

Austin, TX
Tel: 512-257-3370

Boston
Westborough, MA
Tel: 774-760-0087
Fax: 774-760-0088

Chicago
Itasca, IL
Tel: 630-285-0071
Fax: 630-285-0075

Cleveland
Independence, OH
Tel: 216-447-0464
Fax: 216-447-0643

Dallas
Addison, TX
Tel: 972-818-7423
Fax: 972-818-2924

Detroit
Novi, MI
Tel: 248-848-4000

Houston, TX
Tel: 281-894-5983

Indianapolis
Noblesville, IN
Tel: 317-773-8323
Fax: 317-773-5453

Los Angeles
Mission Viejo, CA
Tel: 949-462-9523
Fax: 949-462-9608

New York, NY
Tel: 631-435-6000

San Jose, CA
Tel: 408-735-9110

Canada - Toronto
Tel: 905-673-0699
Fax: 905-673-6509

ASIA/PACIFIC

Asia Pacific Office
Suites 3707-14, 37th Floor
Tower 6, The Gateway
Harbour City, Kowloon
Hong Kong
Tel: 852-2943-5100
Fax: 852-2401-3431

Australia - Sydney
Tel: 61-2-9868-6733
Fax: 61-2-9868-6755

China - Beijing
Tel: 86-10-8569-7000
Fax: 86-10-8528-2104

China - Chengdu
Tel: 86-28-8665-5511
Fax: 86-28-8665-7889

China - Chongqing
Tel: 86-23-8980-9588
Fax: 86-23-8980-9500

China - Dongguan
Tel: 86-769-8702-9880

China - Hangzhou
Tel: 86-571-8792-8115
Fax: 86-571-8792-8116

China - Hong Kong SAR
Tel: 852-2943-5100
Fax: 852-2401-3431

China - Nanjing
Tel: 86-25-8473-2460
Fax: 86-25-8473-2470

China - Qingdao
Tel: 86-532-8502-7355
Fax: 86-532-8502-7205

China - Shanghai
Tel: 86-21-5407-5533
Fax: 86-21-5407-5066

China - Shenyang
Tel: 86-24-2334-2829
Fax: 86-24-2334-2393

China - Shenzhen
Tel: 86-755-8864-2200
Fax: 86-755-8203-1760

China - Wuhan
Tel: 86-27-5980-5300
Fax: 86-27-5980-5118

China - Xian
Tel: 86-29-8833-7252
Fax: 86-29-8833-7256

ASIA/PACIFIC

China - Xiamen
Tel: 86-592-2388138
Fax: 86-592-2388130

China - Zhuhai
Tel: 86-756-3210040
Fax: 86-756-3210049

India - Bangalore
Tel: 91-80-3090-4444
Fax: 91-80-3090-4123

India - New Delhi
Tel: 91-11-4160-8631
Fax: 91-11-4160-8632

India - Pune
Tel: 91-20-3019-1500

Japan - Osaka
Tel: 81-6-6152-7160
Fax: 81-6-6152-9310

Japan - Tokyo
Tel: 81-3-6880- 3770
Fax: 81-3-6880-3771

Korea - Daegu
Tel: 82-53-744-4301
Fax: 82-53-744-4302

Korea - Seoul
Tel: 82-2-554-7200
Fax: 82-2-558-5932 or
82-2-558-5934

Malaysia - Kuala Lumpur
Tel: 60-3-6201-9857
Fax: 60-3-6201-9859

Malaysia - Penang
Tel: 60-4-227-8870
Fax: 60-4-227-4068

Philippines - Manila
Tel: 63-2-634-9065
Fax: 63-2-634-9069

Singapore
Tel: 65-6334-8870
Fax: 65-6334-8850

Taiwan - Hsin Chu
Tel: 886-3-5778-366
Fax: 886-3-5770-955

Taiwan - Kaohsiung
Tel: 886-7-213-7828

Taiwan - Taipei
Tel: 886-2-2508-8600
Fax: 886-2-2508-0102

Thailand - Bangkok
Tel: 66-2-694-1351
Fax: 66-2-694-1350

EUROPE

Austria - Wels
Tel: 43-7242-2244-39
Fax: 43-7242-2244-393

Denmark - Copenhagen
Tel: 45-4450-2828
Fax: 45-4485-2829

France - Paris
Tel: 33-1-69-53-63-20
Fax: 33-1-69-30-90-79

Germany - Dusseldorf
Tel: 49-2129-3766400

Germany - Munich
Tel: 49-89-627-144-0
Fax: 49-89-627-144-44

Germany - Pforzheim
Tel: 49-7231-424750

Italy - Milan
Tel: 39-0331-742611
Fax: 39-0331-466781

Italy - Venice
Tel: 39-049-7625286

Netherlands - Drunen
Tel: 31-416-690399
Fax: 31-416-690340

Poland - Warsaw
Tel: 48-22-3325737

Spain - Madrid
Tel: 34-91-708-08-90
Fax: 34-91-708-08-91

Sweden - Stockholm
Tel: 46-8-5090-4654

UK - Wokingham
Tel: 44-118-921-5800
Fax: 44-118-921-5820

01/27/15