NX3DV2567-Q100

Low-ohmic four-pole double-throw analog switch

Rev. 1 — 20 January 2014 Product data sheet

1. General description

The NX3DV2567-Q100 is a four-pole double-throw analog switch (4PDT) optimized for switching WLAN-SIM supply, data and control signals. It has one digital select input (S) and four switches each with two independent input/outputs (nY0 and nY1) and a common input/output (nZ). Schmitt-trigger action at S, makes the circuit tolerant to slower input rise and fall times across the entire V_{CC} range from 1.4 V to 4.3 V.

Lower-level logic signals can drive pin S without a significant increase in supply current I_{CC}, due to a low input voltage threshold. This characteristic makes it possible for the NX3DV2567-Q100 to switch 4.3 V signals with a 1.8 V digital controller, eliminating the need for logic level translation.

The NX3DV2567-Q100 allows signals with amplitude up to V_{CC} to be transmitted from nZ to nY0 or nY1; or from nY0 or nY1 to nZ.

This product has been qualified to the Automotive Electronics Council (AEC) standard Q100 (Grade 1) and is suitable for use in automotive applications.

2. Features and benefits

- Automotive product qualification in accordance with AEC-Q100 (Grade 1)
  - Specified from –40 °C to +85 °C and from –40 °C to +125 °C
- Wide supply voltage range from 1.4 V to 4.3 V
- Very low ON resistance for supply path:
  - 0.5 Ω (typical) at V_{CC} = 1.8 V
  - 0.45 Ω (typical) at V_{CC} = 2.7 V
- Low ON resistance for data path:
  - 7 Ω (typical) at V_{CC} = 1.8 V
  - 6 Ω (typical) at V_{CC} = 2.7 V
- Low ON capacitance for data path
- Wide –3 dB bandwidth > 160 MHz
- Break-before-make switching
- High noise immunity
- ESD protection:
  - MIL-STD-883, method 3015 Class 3A exceeds 4000 V
  - HBM JESD22-A114F Class 3A exceeds 4000 V
  - MIL-STD-883, method 3015 Class 3A I/O to GND exceeds 7000 V
  - HBM JESD22-A114F Class 3A I/O to GND exceeds 7000 V
  - CDM AEC-Q100-011 revision B exceeds 1000 V
- CMOS low-power consumption

- Latch-up performance exceeds 100 mA per JESD 78B Class II Level A
- 1.8 V control logic at V_{CC} = 3.6 V
- Control input accepts voltages above supply voltage
- Very low supply current, even when input is below V_{CC}
- High current handling capability (350 mA continuous current under 3.3 V supply for supply path switch)

3. Applications

- Cell phone, PDA, digital camera, printer and notebook
- LCD monitor, TV and set-top box

4. Ordering information

Table 1. Ordering information

Type number	Package			
	Temperature range	Name	Description	Version
NX3DV2567HR-Q100	–40 °C to +125 °C	HXQFN16U	plastic thermal enhanced extremely thin quad flat package; no leads; 16 terminals; UTLP based; body 3 x 3 x 0.5 mm	SOT1039-1

5. Marking

Table 2. Marking codes

Type number	Marking code
NX3DV2567HR-Q100	D60

6. Functional diagram

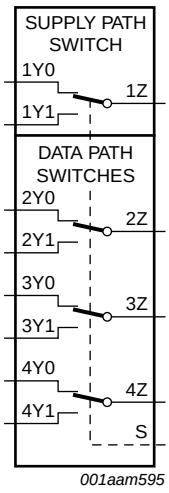

Fig 1. Logic symbol

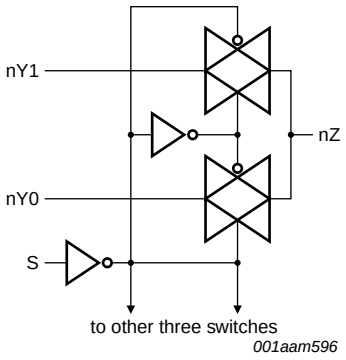

Fig 2. Logic diagram (one switch)

7. Pinning information

7.1 Pinning

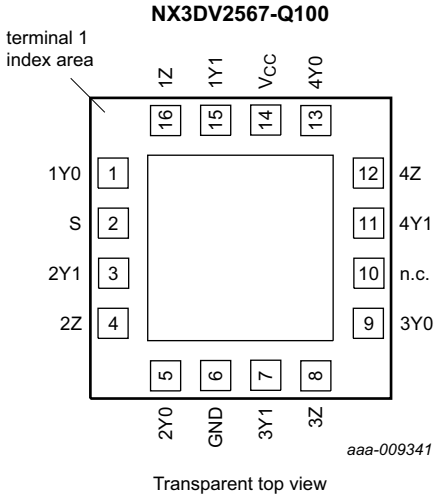

Fig 3. Pin configuration SOT1039-1 (HXQFN16U)

7.2 Pin description

Table 3. Pin description

Symbol	Pin	Description
1Y0	1	independent input or output (supply switch)
2Y0, 3Y0, 4Y0	5, 9, 13	independent input or output (data switch)
S	2	select input
1Y1	15	independent input or output (supply switch)
2Y1, 3Y1, 4Y1	3, 7, 11	independent input or output (data switch)
1Z	16	common output or input (supply switch)
2Z, 3Z, 4Z	4, 8, 12	common output or input (data switch)
GND	6	ground (0 V)
n.c.	10	not connected
V_{CC}	14	supply voltage

8. Functional description

Table 4. Function table[1]

Input S	Channel on
L	nY0
H	nY1

[1] H = HIGH voltage level; L = LOW voltage level.

9. Limiting values

Table 5. Limiting values

In accordance with the Absolute Maximum Rating System (IEC 60134). Voltages are referenced to GND (ground = 0 V).

Symbol	Parameter	Conditions		Min	Max	Unit
V_{CC}	supply voltage			–0.5	+4.6	V
V_I	input voltage	select input S	[1]	–0.5	+4.6	V
V_{SW}	switch voltage		[2]	–0.5	V_{CC} + 0.5	V
I_{IK}	input clamping current	V_I < –0.5 V		–50	-	mA
I_{SK}	switch clamping current	V_I < –0.5 V or V_I > V_{CC} + 0.5 V		-	±50	mA
I_{SW}	switch current	supply path switch				
		V_{SW} > –0.5 V or V_{SW} < V_{CC} + 0.5 V; source or sink current		-	±350	mA
		V_{SW} > –0.5 V or V_{SW} < V_{CC} + 0.5 V; pulsed at 1 ms duration, < 10 % duty cycle; peak current		-	±500	mA
		data path switch				
		V_{SW} > –0.5 V or V_{SW} < V_{CC} + 0.5 V; source or sink current		-	±128	mA
T_{stg}	storage temperature			–65	+150	°C
P_{tot}	total power dissipation	T_{amb} = –40 °C to +125 °C	[3]	-	250	mW

[1] The minimum input voltage rating may be exceeded if the input current rating is observed.

[2] The minimum and maximum switch voltage ratings may be exceeded if the switch clamping current rating is observed but may not exceed 4.6 V.

[3] Above 135 °C, the value of P_{tot} derates linearly with 16.9 mW/K.

10. Recommended operating conditions

Table 6. Recommended operating conditions

Symbol	Parameter	Conditions		Min	Max	Unit
V_{CC}	supply voltage			1.4	4.3	V
V_I	input voltage	select input S		0	4.3	V
V_{SW}	switch voltage		[1]	0	V_{CC}	V
T_{amb}	ambient temperature			–40	+125	°C
$\Delta t/\Delta V$	input transition rise and fall rate	V_{CC} = 1.4 V to 4.3 V	[2]	-	200	ns/V

[1] To avoid sinking GND current from terminal nZ when switch current flows in terminal nYn, the voltage drop across the bidirectional switch must not exceed 0.4 V. If the switch current flows into terminal nZ, no GND current flows from terminal nYn. In this case, there is no limit for the voltage drop across the switch.

[2] Applies to control signal levels.

11. Static characteristics

Table 7. Static characteristics

At recommended operating conditions; voltages are referenced to GND (ground 0 V).

Symbol	Parameter	Conditions	T_{amb} = 25 °C			T_{amb} = −40 °C to +125 °C			Unit
			Min	Typ	Max	Min	Max (85 °C)	Max (125 °C)	
V_{IH}	HIGH-level input voltage	V_{CC} = 1.4 V to 1.6 V	0.9	-	-	0.9	-	-	V
		V_{CC} = 1.65 V to 1.95 V	0.9	-	-	0.9	-	-	V
		V_{CC} = 2.3 V to 2.7 V	1.1	-	-	1.1	-	-	V
		V_{CC} = 2.7 V to 3.6 V	1.3	-	-	1.3	-	-	V
		V_{CC} = 3.6 V to 4.3 V	1.4	-	-	1.4	-	-	V
V_{IL}	LOW-level input voltage	V_{CC} = 1.4 V to 1.6 V	-	-	0.3	-	0.3	0.3	V
		V_{CC} = 1.65 V to 1.95 V	-	-	0.4	-	0.4	0.3	V
		V_{CC} = 2.3 V to 2.7 V	-	-	0.4	-	0.4	0.4	V
		V_{CC} = 2.7 V to 3.6 V	-	-	0.5	-	0.5	0.5	V
		V_{CC} = 3.6 V to 4.3 V	-	-	0.6	-	0.6	0.6	V
I_I	input leakage current	select input S; V_I = GND to 4.3 V; V_{CC} = 1.4 V to 4.3 V	-	-	-	-	±0.5	±1	μA
$I_{S(OFF)}$	OFF-state leakage current	nY0 and nY1 port; see Figure 4							
		V_{CC} = 1.4 V to 3.6 V	-	-	±5	-	±50	±500	nA
		V_{CC} = 3.6 V to 4.3 V	-	-	±10	-	±50	±500	nA
$I_{S(ON)}$	ON-state leakage current	nZ port; V_{CC} = 1.4 V to 3.6 V; see Figure 5							
		V_{CC} = 1.4 V to 3.6 V	-	-	±5	-	±50	±500	nA
		V_{CC} = 3.6 V to 4.3 V	-	-	±10	-	±50	±500	nA
I_{CC}	supply current	V_I = V_{CC} or GND; V_{SW} = GND or V_{CC}							
		V_{CC} = 3.6 V	-	-	100	-	500	5000	nA
		V_{CC} = 4.3 V	-	-	150	-	800	6000	nA
ΔI_{CC}	additional supply current	V_{SW} = GND or V_{CC}							
		V_I = 2.6 V; V_{CC} = 4.3 V	-	2.0	4.0	-	7	7	μA
		V_I = 2.6 V; V_{CC} = 3.6 V	-	0.35	0.7	-	1	1	μA
		V_I = 1.8 V; V_{CC} = 4.3 V	-	7.0	10.0	-	15	15	μA
		V_I = 1.8 V; V_{CC} = 3.6 V	-	2.5	4.0	-	5	5	μA
		V_I = 1.8 V; V_{CC} = 2.5 V	-	50	200	-	300	500	nA
C_I	input capacitance		-	1	-	-	-	-	pF
$C_{S(OFF)}$	OFF-state capacitance	supply path switch	-	35	-	-	-	-	pF
		data path switch	-	3	-	-	-	-	pF
$C_{S(ON)}$	ON-state capacitance	supply path switch	-	130	-	-	-	-	pF
		data path switch	-	16	-	-	-	-	pF

11.1 Test circuits

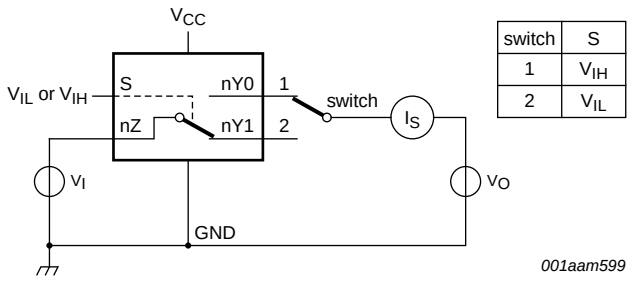

switch	S
1	V_{IH}
2	V_{IL}

V_I = 0.3 V or V_{CC} – 0.3 V; V_O = V_{CC} – 0.3 V or 0.3 V.

Fig 4. Test circuit for measuring OFF-state leakage current

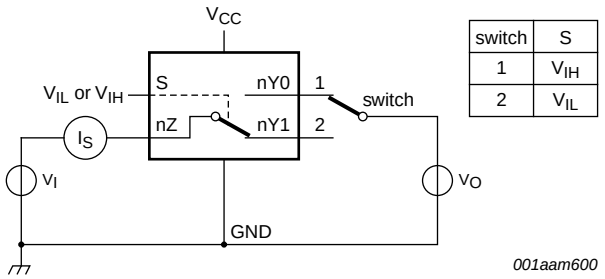

switch	S
1	V_{IH}
2	V_{IL}

V_I = 0.3 V or V_{CC} – 0.3 V; V_O = V_{CC} – 0.3 V or 0.3 V.

Fig 5. Test circuit for measuring ON-state leakage current

11.2 ON resistance

Table 8. ON resistance

At recommended operating conditions; voltages are referenced to GND (ground = 0 V); for graphs see Figure 7 to Figure 12.

Symbol	Parameter	Conditions	T_{amb} = –40 °C to +85 °C			T_{amb} = –40 °C to +125 °C		Unit
			Min	Typ[1]	Max	Min	Max	
Supply path switch								
R_{ON}	ON resistance	V_I = GND to V_{CC}; I_{SW} = 100 mA; see Figure 6						
		V_{CC} = 1.8 V; V_{SW} = 0 V, 1.8 V	-	0.5	0.75	-	0.85	Ω
		V_{CC} = 2.7 V; V_{SW} = 0 V, 2.3 V	-	0.45	0.7	-	0.8	Ω
ΔR_{ON}	ON resistance mismatch between channels	V_I = GND to V_{CC}; I_{SW} = 100 mA [2]						
		V_{CC} = 2.7 V; V_{SW} = 0 V	-	0.1	-	-	-	Ω

Table 8. ON resistance *...continued*

At recommended operating conditions; voltages are referenced to GND (ground = 0 V); for graphs see Figure 7 to Figure 12.

Symbol	Parameter	Conditions	T_{amb} = −40 °C to +85 °C			T_{amb} = −40 °C to +125 °C		Unit
			Min	Typ[1]	Max	Min	Max	
Data path switches								
R_{ON}	ON resistance	V_I = GND to V_{CC}; I_{SW} = 20 mA; see Figure 6						
		V_{CC} = 1.8 V; V_{SW} = 0 V, 1.8 V	-	7.0	10.0	-	11.0	Ω
		V_{CC} = 2.7 V; V_{SW} = 0 V, 2.3 V	-	6.0	9.5	-	10.5	Ω
ΔR_{ON}	ON resistance mismatch between channels	V_I = GND to V_{CC}; I_{SW} = 20 mA [2]						
		V_{CC} = 2.7 V; V_{SW} = 0 V	-	0.2	-	-	-	Ω

[1] Typical values are measured at T_{amb} = 25 °C.

[2] Measured at identical V_{CC}, temperature and input voltage.

11.3 ON resistance test circuit and graphs

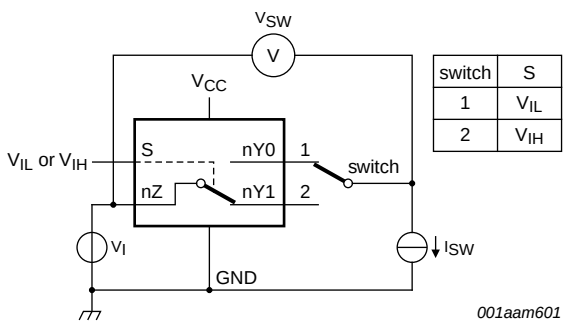

switch	S
1	V_{IL}
2	V_{IH}

$R_{ON} = V_{SW} / I_{SW}$.

Fig 6. Test circuit for measuring ON resistance

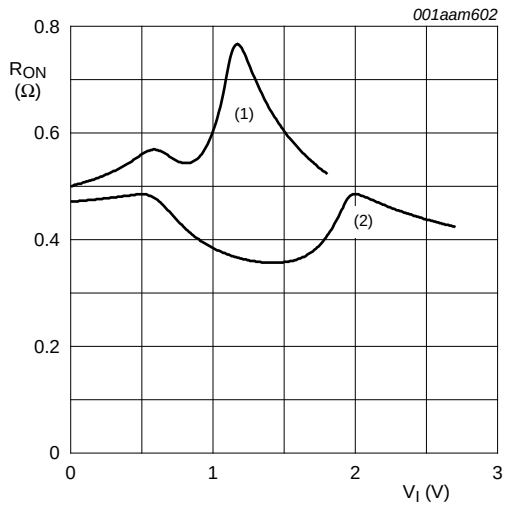

(1) V_{CC} = 1.8 V.

(2) V_{CC} = 2.7 V.

Fig 7. Typical ON resistance as a function of input voltage (supply path switch)

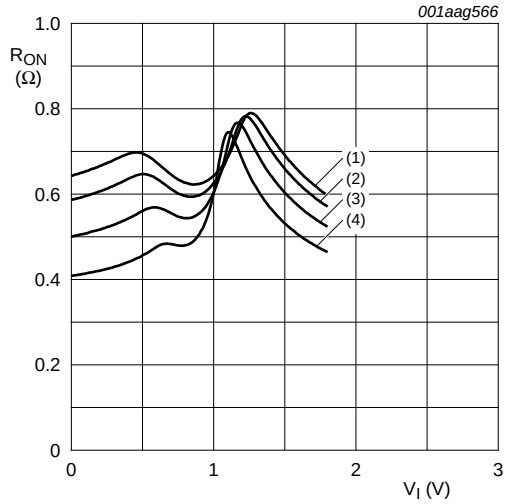

(1) T_{amb} = 125 °C.

(2) T_{amb} = 85 °C.

(3) T_{amb} = 25 °C.

(4) T_{amb} = –40 °C.

Fig 8. ON resistance as a function of input voltage; V_{CC} = 1.8 V (supply path switch)

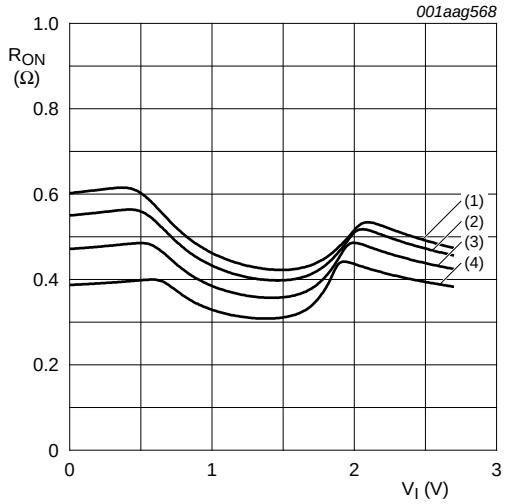

(1) T_{amb} = 125 °C.

(2) T_{amb} = 85 °C.

(3) T_{amb} = 25 °C.

(4) T_{amb} = –40 °C.

Fig 9. ON resistance as a function of input voltage; V_{CC} = 2.7 V (supply path switch)

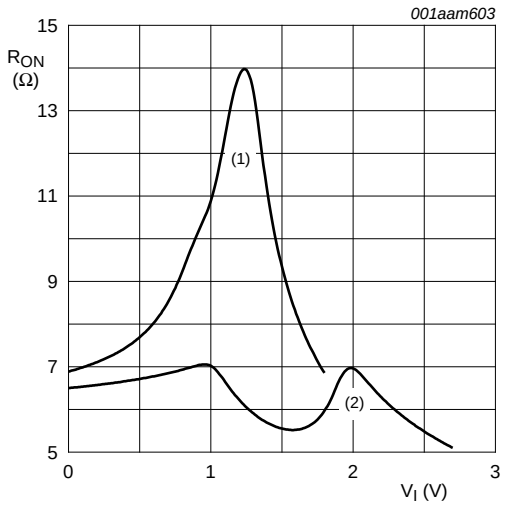

(1) V_{CC} = 1.8 V.

(2) V_{CC} = 2.7 V.

Fig 10. Typical ON resistance as a function of input voltage (data path switch)

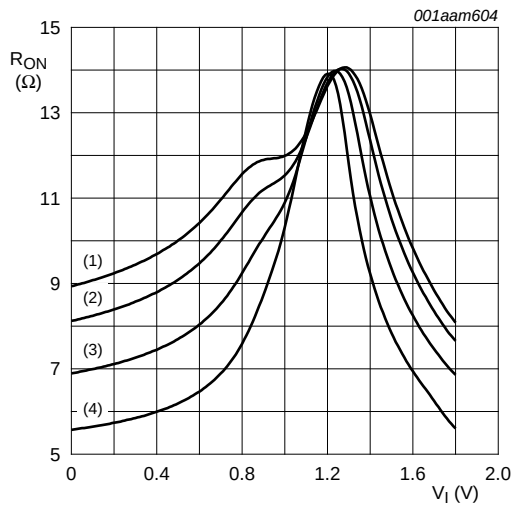

(1) T_{amb} = 125 °C.
(2) T_{amb} = 85 °C.
(3) T_{amb} = 25 °C.
(4) T_{amb} = –40 °C.

Fig 11. ON resistance as a function of input voltage; V_{CC} = 1.8 V (data path switch)

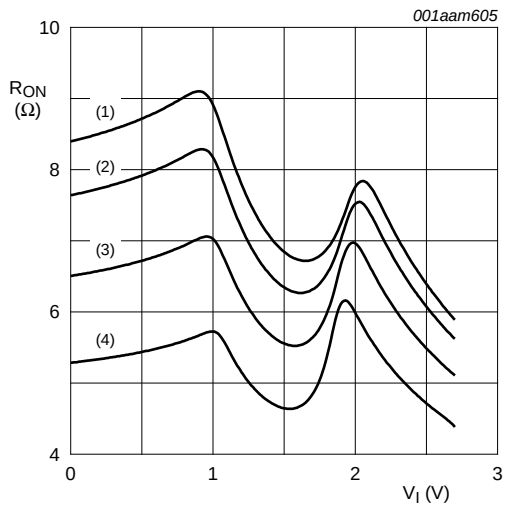

(1) T_{amb} = 125 °C.
(2) T_{amb} = 85 °C.
(3) T_{amb} = 25 °C.
(4) T_{amb} = –40 °C.

Fig 12. ON resistance as a function of input voltage; V_{CC} = 2.7 V (data path switch)

12. Dynamic characteristics

Table 9. Dynamic characteristics

At recommended operating conditions; voltages are referenced to GND (ground = 0 V); for load circuit, see Figure 15.

Symbol	Parameter	Conditions	25 °C			–40 °C to +125 °C			Unit
			Min	Typ[1]	Max	Min	Max (85 °C)	Max (125 °C)	
Supply path switch									
t_{en}	enable time	S to 1Z or 1Y0, 1Y1; see Figure 13							
		V_{CC} = 1.4 V to 1.6 V	-	41	90	-	120	120	ns
		V_{CC} = 1.65 V to 1.95 V	-	30	70	-	80	90	ns
		V_{CC} = 2.3 V to 2.7 V	-	20	45	-	50	55	ns
		V_{CC} = 2.7 V to 3.6 V	-	19	40	-	45	50	ns
		V_{CC} = 3.6 V to 4.3 V	-	19	40	-	45	50	ns
t_{dis}	disable time	S to 1Z or 1Y0, 1Y1; see Figure 13							
		V_{CC} = 1.4 V to 1.6 V	-	24	70	-	80	90	ns
		V_{CC} = 1.65 V to 1.95 V	-	15	55	-	60	65	ns
		V_{CC} = 2.3 V to 2.7 V	-	9	25	-	30	35	ns
		V_{CC} = 2.7 V to 3.6 V	-	8	20	-	25	30	ns
		V_{CC} = 3.6 V to 4.3 V	-	8	20	-	25	30	ns

Table 9. Dynamic characteristics *...continued*

At recommended operating conditions; voltages are referenced to GND (ground = 0 V); for load circuit, see Figure 15.

Symbol	Parameter	Conditions	25 °C			–40 °C to +125 °C			Unit
			Min	Typ[1]	Max	Min	Max (85 °C)	Max (125 °C)	
t_{b-m}	break-before-make time	see Figure 14 [2]							
		V_{CC} = 1.4 V to 1.6 V	-	20	-	9	-	-	ns
		V_{CC} = 1.65 V to 1.95 V	-	17	-	7	-	-	ns
		V_{CC} = 2.3 V to 2.7 V	-	13	-	4	-	-	ns
		V_{CC} = 2.7 V to 3.6 V	-	11	-	3	-	-	ns
		V_{CC} = 3.6 V to 4.3 V	-	11	-	2	-	-	ns
Data path switch									
t_{en}	enable time	S to nZ or nYn; see Figure 13							
		V_{CC} = 1.4 V to 1.6 V	-	40	90	-	120	120	ns
		V_{CC} = 1.65 V to 1.95 V	-	29	70	-	80	90	ns
		V_{CC} = 2.3 V to 2.7 V	-	20	45	-	50	55	ns
		V_{CC} = 2.7 V to 3.6 V	-	19	40	-	45	50	ns
		V_{CC} = 3.6 V to 4.3 V	-	19	40	-	45	50	ns
t_{dis}	disable time	S to nZ or nYn; see Figure 13							
		V_{CC} = 1.4 V to 1.6 V	-	21	70	-	80	90	ns
		V_{CC} = 1.65 V to 1.95 V	-	13	55	-	60	65	ns
		V_{CC} = 2.3 V to 2.7 V	-	8	25	-	30	35	ns
		V_{CC} = 2.7 V to 3.6 V	-	7	20	-	25	30	ns
		V_{CC} = 3.6 V to 4.3 V	-	7	20	-	25	30	ns
t_{b-m}	break-before-make time	see Figure 14 [2]							
		V_{CC} = 1.4 V to 1.6 V	-	23	-	9	-	-	ns
		V_{CC} = 1.65 V to 1.95 V	-	19	-	7	-	-	ns
		V_{CC} = 2.3 V to 2.7 V	-	15	-	4	-	-	ns
		V_{CC} = 2.7 V to 3.6 V	-	13	-	3	-	-	ns
		V_{CC} = 3.6 V to 4.3 V	-	12	-	2	-	-	ns

[1] Typical values are measured at T_{amb} = 25 °C and V_{CC} = 1.5 V, 1.8 V, 2.5 V, 3.3 V and 4.3 V respectively.

[2] Break-before-make guaranteed by design.

12.1 Waveform and test circuits

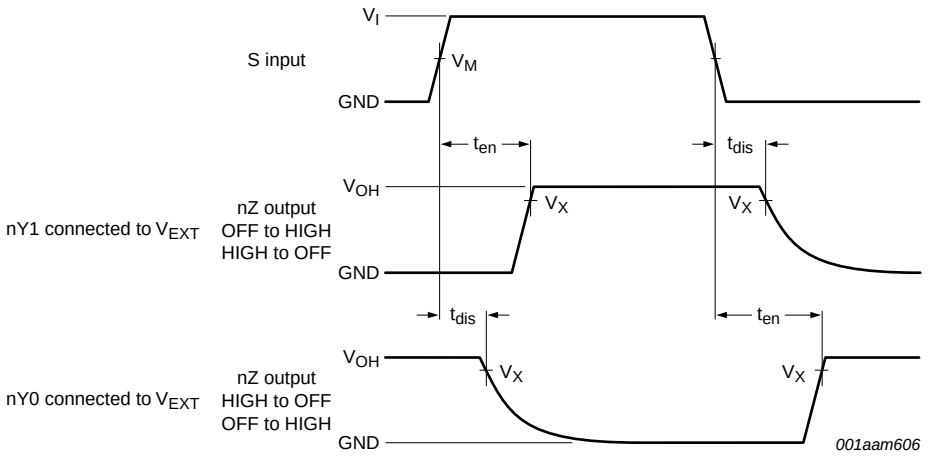

Measurement points are given in Table 10.

Logic level: V_{OH} is typical output voltage level that occurs with the output load.

Fig 13. Enable and disable times

Table 10. Measurement points

Supply voltage	Input	Output
V_{CC}	V_M	V_X
1.4 V to 4.3 V	$0.5V_{CC}$	$0.9V_{OH}$

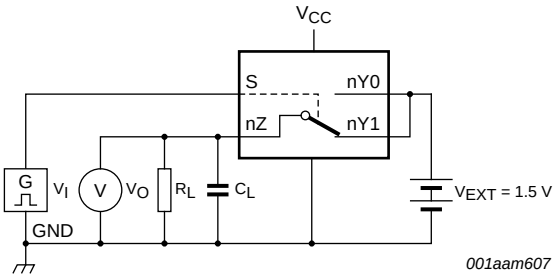

a. Test circuit

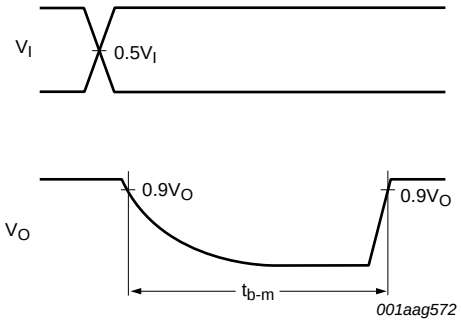

b. Input and output measurement points

Fig 14. Test circuit for measuring break-before-make timing

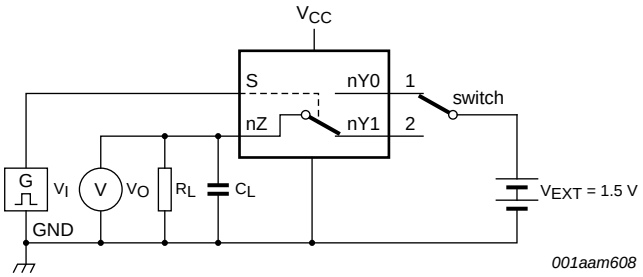

Test data is given in Table 11.

Definitions test circuit:

R_L = Load resistance.

C_L = Load capacitance including jig and probe capacitance.

V_{EXT} = External voltage for measuring switching times.

Fig 15. Test circuit for measuring switching times

Table 11. Test data

Supply voltage	Input		Load	
V_{CC}	V_I	t_r, t_f	C_L	R_L
1.4 V to 4.3 V	V_{CC}	≤ 2.5 ns	35 pF	50 Ω

12.2 Additional dynamic characteristics

Table 12. Additional dynamic characteristics

At recommended operating conditions; voltages are referenced to GND (ground = 0 V); V_I = GND or V_{CC} (unless otherwise specified); $t_r = t_f \leq 2.5$ ns; T_{amb} = 25 °C.

Symbol	Parameter	Conditions		Min	Typ	Max	Unit
Data path switch							
$f_{(-3dB)}$	–3 dB frequency response	R_L = 50 Ω; see Figure 16	[1]				
		V_{CC} = 2.7 V to 3.6 V		-	330	-	MHz
α_{iso}	isolation (OFF-state)	f_i = 10 MHz; R_L = 50 Ω; see Figure 17	[1]				
		V_{CC} = 2.7 V to 3.6 V		-	–60	-	dB
Xtalk	crosstalk	between switches; f_i = 10 MHz; R_L = 50 Ω; see Figure 18	[1]				
		V_{CC} = 2.7 V to 3.6 V		-	–60	-	dB
Q_{inj}	charge injection	f_i = 1 MHz; C_L = 0.1 nF; R_L = 1 MΩ; V_{gen} = 0 V; R_{gen} = 0 Ω; see Figure 19					
		V_{CC} = 2.7 V to 3.6 V		-	10	-	pC

[1] f_i is biased at $0.5V_{CC}$.

12.3 Test circuits

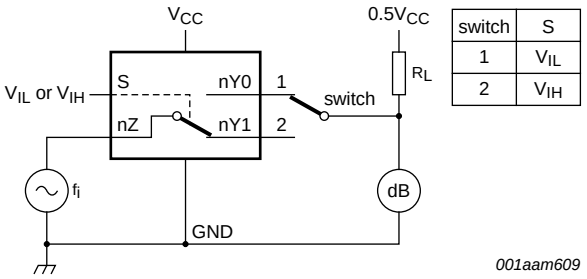

switch	S
1	V_{IL}
2	V_{IH}

To obtain 0 dBm level at output, adjust f_i voltage. Increase f_i frequency until dB meter reads –3 dB.

Fig 16. Test circuit for measuring the frequency response when channel is in ON-state

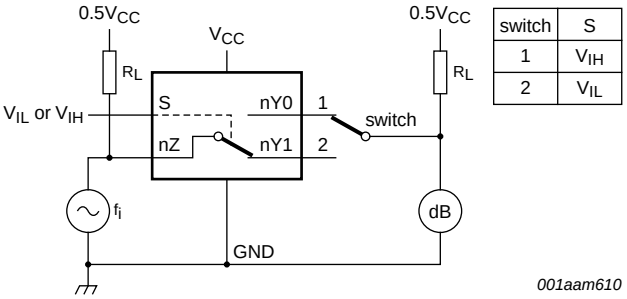

switch	S
1	V_{IH}
2	V_{IL}

To obtain 0 dBm level at input, adjust f_i voltage.

Fig 17. Test circuit for measuring isolation (OFF-state)

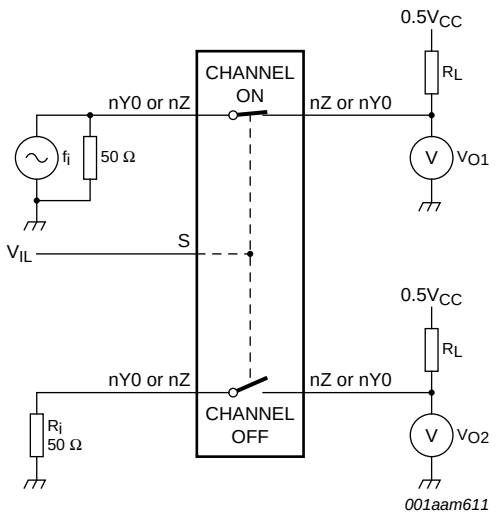

20 $\log_{10}$ (V_{O2} / V_{O1}) or 20 $\log_{10}$ (V_{O1} / V_{O2}).

Fig 18. Test circuit for measuring crosstalk between switches

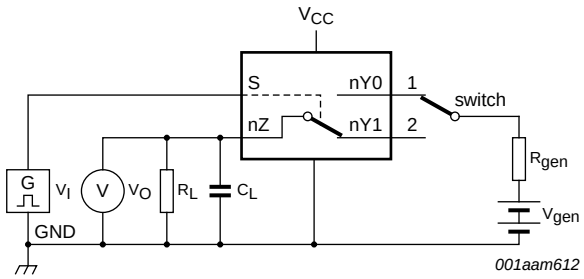

a. Test circuit

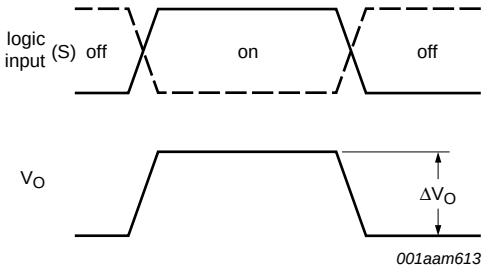

b. Input and output pulse definitions

Definition: $Q_{inj} = \Delta V_O \times C_L$.

ΔV_O = output voltage variation.

R_{gen} = generator resistance.

V_{gen} = generator voltage.

Fig 19. Test circuit for measuring charge injection

13. Package outline

HXQFN16U: plastic thermal enhanced extremely thin quad flat package; no leads; 16 terminals; UTLP based; body 3 x 3 x 0.5 mm **SOT1039-1**

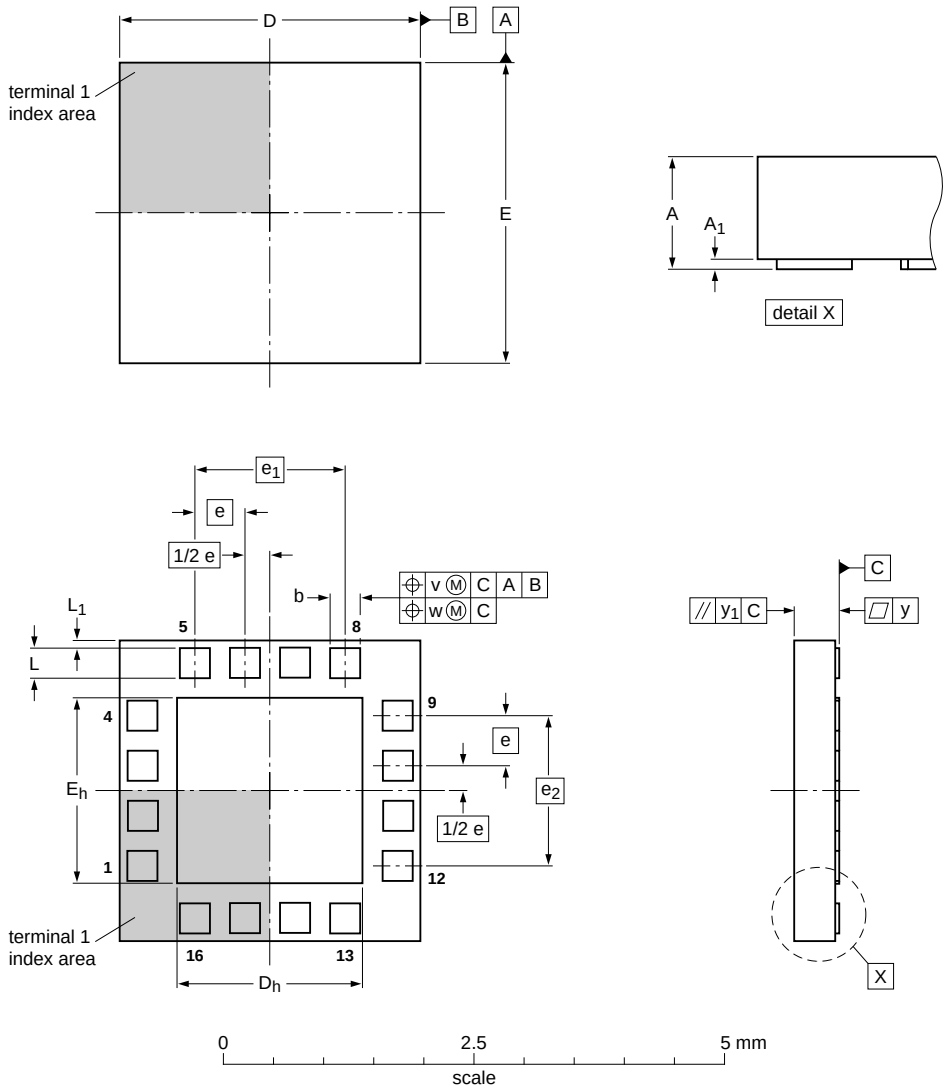

DIMENSIONS (mm are the original dimensions)

UNIT	A max	A_1	b	D	D_h	E	E_h	e	e_1	e_2	L	L_1	v	w	y	y_1
mm	0.5	0.05 0.00	0.35 0.25	3.1 2.9	1.95 1.75	3.1 2.9	1.95 1.75	0.5	1.5	1.5	0.35 0.25	0.1 0.0	0.1	0.05	0.05	0.1

OUTLINE VERSION	REFERENCES				EUROPEAN PROJECTION	ISSUE DATE
	IEC	JEDEC	JEITA			
SOT1039-1	- - -		- - -			~~07-11-14~~ 07-12-01

Fig 20. Package outline SOT1039-1 (HXQFN16U)

14. Abbreviations

Table 13. Abbreviations

Acronym	Description
CDM	Charged Device Model
CMOS	Complementary Metal-Oxide Semiconductor
ESD	ElectroStatic Discharge
HBM	Human Body Model
MM	Machine Model
PDA	Personal Digital Assistant
TTL	Transistor-Transistor Logic

15. Revision history

Table 14. Revision history

Document ID	Release date	Data sheet status	Change notice	Supersedes
NX3DV2567_Q100 v.1	20140120	Product data sheet	-	-

16. Legal information

16.1 Data sheet status

Document status[1][2]	Product status[3]	Definition
Objective [short] data sheet	Development	This document contains data from the objective specification for product development.
Preliminary [short] data sheet	Qualification	This document contains data from the preliminary specification.
Product [short] data sheet	Production	This document contains the product specification.

[1] Please consult the most recently issued document before initiating or completing a design.

[2] The term 'short data sheet' is explained in section "Definitions".

[3] The product status of device(s) described in this document may have changed since this document was published and may differ in case of multiple devices. The latest product status information is available on the Internet at URL http://www.nxp.com.

16.2 Definitions

Draft — The document is a draft version only. The content is still under internal review and subject to formal approval, which may result in modifications or additions. NXP Semiconductors does not give any representations or warranties as to the accuracy or completeness of information included herein and shall have no liability for the consequences of use of such information.

Short data sheet — A short data sheet is an extract from a full data sheet with the same product type number(s) and title. A short data sheet is intended for quick reference only and should not be relied upon to contain detailed and full information. For detailed and full information see the relevant full data sheet, which is available on request via the local NXP Semiconductors sales office. In case of any inconsistency or conflict with the short data sheet, the full data sheet shall prevail.

Product specification — The information and data provided in a Product data sheet shall define the specification of the product as agreed between NXP Semiconductors and its customer, unless NXP Semiconductors and customer have explicitly agreed otherwise in writing. In no event however, shall an agreement be valid in which the NXP Semiconductors product is deemed to offer functions and qualities beyond those described in the Product data sheet.

16.3 Disclaimers

Limited warranty and liability — Information in this document is believed to be accurate and reliable. However, NXP Semiconductors does not give any representations or warranties, expressed or implied, as to the accuracy or completeness of such information and shall have no liability for the consequences of use of such information. NXP Semiconductors takes no responsibility for the content in this document if provided by an information source outside of NXP Semiconductors.

In no event shall NXP Semiconductors be liable for any indirect, incidental, punitive, special or consequential damages (including - without limitation - lost profits, lost savings, business interruption, costs related to the removal or replacement of any products or rework charges) whether or not such damages are based on tort (including negligence), warranty, breach of contract or any other legal theory.

Notwithstanding any damages that customer might incur for any reason whatsoever, NXP Semiconductors' aggregate and cumulative liability towards customer for the products described herein shall be limited in accordance with the *Terms and conditions of commercial sale* of NXP Semiconductors.

Right to make changes — NXP Semiconductors reserves the right to make changes to information published in this document, including without limitation specifications and product descriptions, at any time and without notice. This document supersedes and replaces all information supplied prior to the publication hereof.

Suitability for use in automotive applications — This NXP Semiconductors product has been qualified for use in automotive applications. Unless otherwise agreed in writing, the product is not designed, authorized or warranted to be suitable for use in life support, life-critical or safety-critical systems or equipment, nor in applications where failure or malfunction of an NXP Semiconductors product can reasonably be expected to result in personal injury, death or severe property or environmental damage. NXP Semiconductors and its suppliers accept no liability for inclusion and/or use of NXP Semiconductors products in such equipment or applications and therefore such inclusion and/or use is at the customer's own risk.

Applications — Applications that are described herein for any of these products are for illustrative purposes only. NXP Semiconductors makes no representation or warranty that such applications will be suitable for the specified use without further testing or modification.

Customers are responsible for the design and operation of their applications and products using NXP Semiconductors products, and NXP Semiconductors accepts no liability for any assistance with applications or customer product design. It is customer's sole responsibility to determine whether the NXP Semiconductors product is suitable and fit for the customer's applications and products planned, as well as for the planned application and use of customer's third party customer(s). Customers should provide appropriate design and operating safeguards to minimize the risks associated with their applications and products.

NXP Semiconductors does not accept any liability related to any default, damage, costs or problem which is based on any weakness or default in the customer's applications or products, or the application or use by customer's third party customer(s). Customer is responsible for doing all necessary testing for the customer's applications and products using NXP Semiconductors products in order to avoid a default of the applications and the products or of the application or use by customer's third party customer(s). NXP does not accept any liability in this respect.

Limiting values — Stress above one or more limiting values (as defined in the Absolute Maximum Ratings System of IEC 60134) will cause permanent damage to the device. Limiting values are stress ratings only and (proper) operation of the device at these or any other conditions above those given in the Recommended operating conditions section (if present) or the Characteristics sections of this document is not warranted. Constant or repeated exposure to limiting values will permanently and irreversibly affect the quality and reliability of the device.

Terms and conditions of commercial sale — NXP Semiconductors products are sold subject to the general terms and conditions of commercial sale, as published at http://www.nxp.com/profile/terms, unless otherwise agreed in a valid written individual agreement. In case an individual agreement is concluded only the terms and conditions of the respective agreement shall apply. NXP Semiconductors hereby expressly objects to applying the customer's general terms and conditions with regard to the purchase of NXP Semiconductors products by customer.

No offer to sell or license — Nothing in this document may be interpreted or construed as an offer to sell products that is open for acceptance or the grant, conveyance or implication of any license under any copyrights, patents or other industrial or intellectual property rights.

Export control — This document as well as the item(s) described herein may be subject to export control regulations. Export might require a prior authorization from competent authorities.

Translations — A non-English (translated) version of a document is for reference only. The English version shall prevail in case of any discrepancy between the translated and English versions.

16.4 Trademarks

Notice: All referenced brands, product names, service names and trademarks are the property of their respective owners.

17. Contact information

For more information, please visit: **http://www.nxp.com**

For sales office addresses, please send an email to: **salesaddresses@nxp.com**

18. Contents

For more information, please visit: http://www.nxp.com
For sales office addresses, please send an email to: salesaddresses@nxp.com

Date of release: 20 January 2014
Document identifier: NX3DV2567_Q100