NCS2200AGEVB

NCS2200A UDFN6 Package Evaluation Board User's Manual

ON Semiconductor®

http://onsemi.com

EVAL BOARD USER'S MANUAL

Description

This document describes the NCS2200A 6 pin UDFN package evaluation board. It should be used in conjunction with the data sheet which contains full technical details on the device specification and operation. This evaluation board is offered as a convenience for the customers interested in performing their own engineering characterization and performance assessment. The evaluation board provides a 50 Ω controlled impedance environment. The evaluation board is designed to facilitate a quick evaluation of the device.

This evaluation board manual contains:

- Information on NCS2200A Evaluation Board
- Bill of Materials

Board Lay−up

The evaluation boards are implemented in two layers. The first layer is the primary signal traces and the device. The FR4 dielectric material is placed between the first and second layer. The second layer is the 1.0 oz copper ground plane, with portion of the ground plane cutout for power.

Board Design

The evaluation board was designed to be flexible (See Figure 3).

- Inputs
  - Inputs have place holders for termination resistors to ground if input signal requires termination
- Outputs
  - Outputs have a place holder for loads. It can either be loaded with resistor or capacitor or both or none at all.
- Power Supply
  - It can be operated with either single power supply or dual power supply

    For single power supply – Jumper the V_{EE} and GND together

    For dual power supply – Do not jumper the V_{EE} and GND
  - Both V_{CC} and V_{EE} have power supply decoupling capacitors

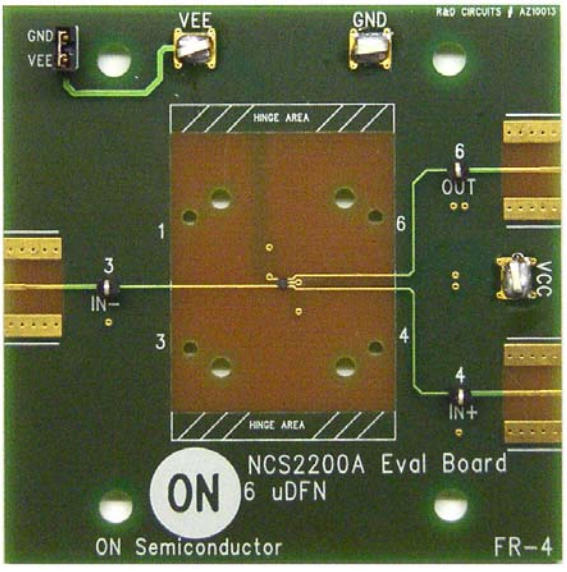

Figure 1. Evaluation Board Photo

May, 2012 − Rev. 1

Publication Order Number:
EVBUM2113/D

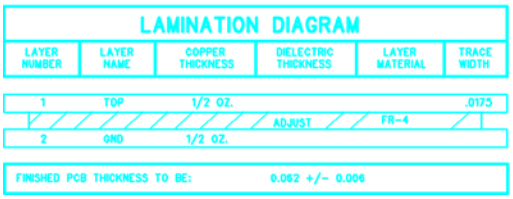

Figure 2. Evaluation Board Lay−up

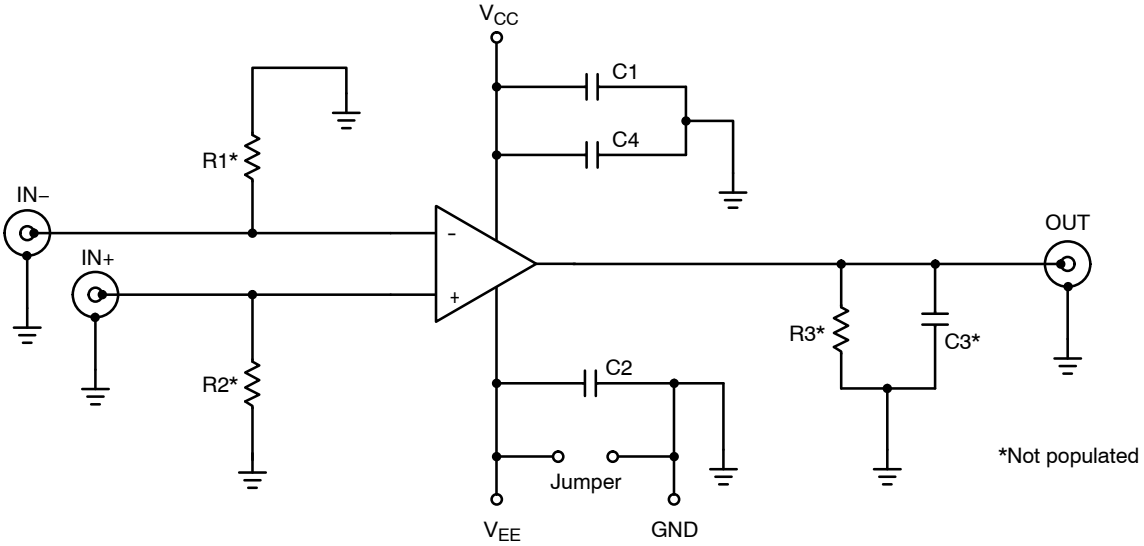

Figure 3. Evaluation Board Schematic

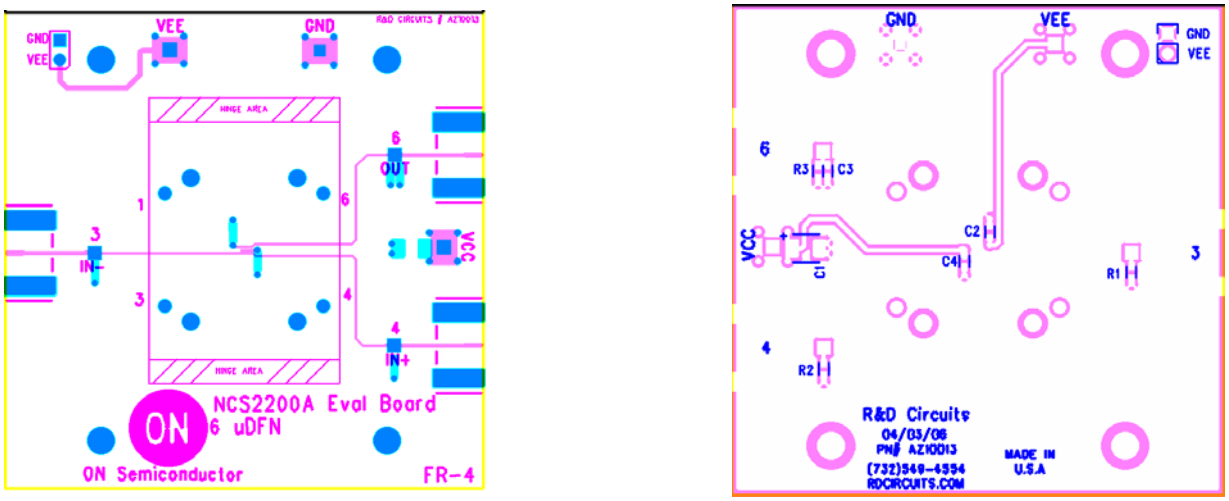

Top View

Bottom View

Figure 4. Evaluation Board Layout

Table 1. BILL OF MATERIALS FOR NCS2200A

Item	Qty	Ref Des	Value	Package	Description	MFG	Part Number
1	1	C1	10 μF		Capacitor	Kermet	T491C106K025AS
2	2	C2, C4	0.1 μF	0603	Capacitor	TDK Corp	C1608X7R1H104K
3	1	JMP			Jumper Shorting Tin	Sullins Electronics Corp	STC02SYAN
4	1	JMP			Jumper Header	Sullins Electronics Corp	PTC36SABN
5	3	V_{CC}, V_{EE}, GND			Surface Mount Test Clip	Keystone	5016
6	3	IN−, IN+, OUT			Through Test Point (Optional: SMA Connector)	Keystone (Johnson Comp.)	5000 (142−0701−801)
7	1	DUT		UDFN8	NCS2220A UDFN8	ON Semi	NCS2220AMUT1G
8	1				NCS2220A Eval Board	ON Semi	NCS2220AEVB
Parts Not Installed							
9	1	C3		0603	Capacitor		
10	3	R1, R2, R3		0603	Resistor		

NCS2200A EVALUATION BOARD TEST PROCEDURE

NCS2200A is a single low power comparator. The test is simply to power up the device and make sure the device is functional.

Test Condition for NCS2200A

- Test the board at the following power supply voltage and temperature
  - Voltage: 0.85 V, 3 V, 6 V
  - Temperature: Room

Test Procedure for NCS2200A

- Power up the device.
  - Place a jumper to short GND and VEE.
  - Short one of the inputs to ground, short the other input to Vcc.
  - Read the power supply current and verify that it is according to the data sheet specification.
- Functionality Test
  - Short negative input to ground and short positive input to Vcc, the output voltage should be Vcc.
  - Short negative input to Vcc and short positive input to ground, the output voltage should be ground.

PUBLICATION ORDERING INFORMATION

LITERATURE FULFILLMENT:
Literature Distribution Center for ON Semiconductor
P.O. Box 5163, Denver, Colorado 80217 USA
Phone: 303−675−2175 or 800−344−3860 Toll Free USA/Canada
Fax: 303−675−2176 or 800−344−3867 Toll Free USA/Canada
Email: orderlit@onsemi.com

N. American Technical Support: 800−282−9855 Toll Free USA/Canada
Europe, Middle East and Africa Technical Support:
Phone: 421 33 790 2910
Japan Customer Focus Center
Phone: 81−3−5817−1050

ON Semiconductor Website: **www.onsemi.com**

Order Literature: http://www.onsemi.com/orderlit

For additional information, please contact your local Sales Representative