NCV890204GEVB

NCV890204 Evaluation Board User's Manual

ON Semiconductor®

http://onsemi.com

EVAL BOARD USER'S MANUAL

Description

The NCV890204 is a fixed-frequency, monolithic, Buck switching regulator intended for Automotive, battery-connected applications that must operate with up to a 36 V input supply. The regulator is suitable for systems with low noise and small form factor requirements often encountered in automotive driver information systems. The NCV890204 is capable of converting the typical 4.5 V to 18 V automotive input voltage range to outputs as low as 3.3 V at a constant switching frequency above the sensitive AM band, eliminating the need for costly filters and EMI countermeasures. A Reset pin signals when the output is in regulation, and a pin is provided to adjust the delay before the RSTB signal goes high. The NCV890204 also provides several protection features expected in Automotive power supply systems such as current limit, short circuit protection, and thermal shutdown. In addition, the high switching frequency produces low output voltage ripple even when using small inductor values and an all-ceramic output filter capacitor − forming a space-efficient switching regulator solution.

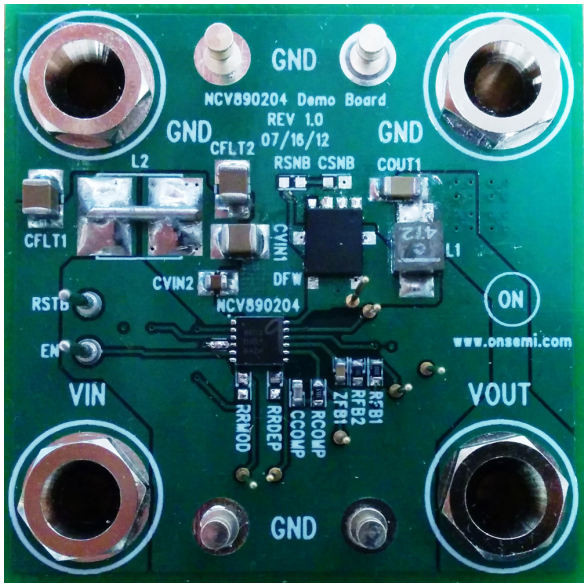

Figure 1. NCV890204 Evaluation Board

Key Features

- Internal N-channel Power Switch
- Low V_{IN} Operation Down to 4.5 V
- High V_{IN} Operation to 36 V
- Withstands Load Dump to 40 V
- 2 MHz Free-running Switching Frequency
- Adjustable Spread Spectrum
- Reset with Adjustable Delay
- Logic level Enable Input Can be Directly Tied to Battery
- 2.0 A (min) Cycle-by-Cycle Peak Current Limit
- Short Circuit Protection enhanced by Frequency Foldback
- ±1.75% Output Voltage Tolerance
- Output Voltage Adjustable Down to 0.8 V
- 1.4 Millisecond Internal Soft-Start
- Thermal Shutdown (TSD)
- Low Shutdown Current
- NCV Prefix for Automotive and Other Applications Requiring Unique Site and Control Change Requirements; AEC−Q100 Qualified and PPAP Capable
- Wettable Flanks DFN (Pin Edge Plating)
- These Devices are Pb-Free and are RoHS Compliant

Typical Applications

- Audio, Infotainment, Safety – Vision Systems, Instrumentation

May, 2014 − Rev. 1

Publication Order Number:
EVBUM2226/D

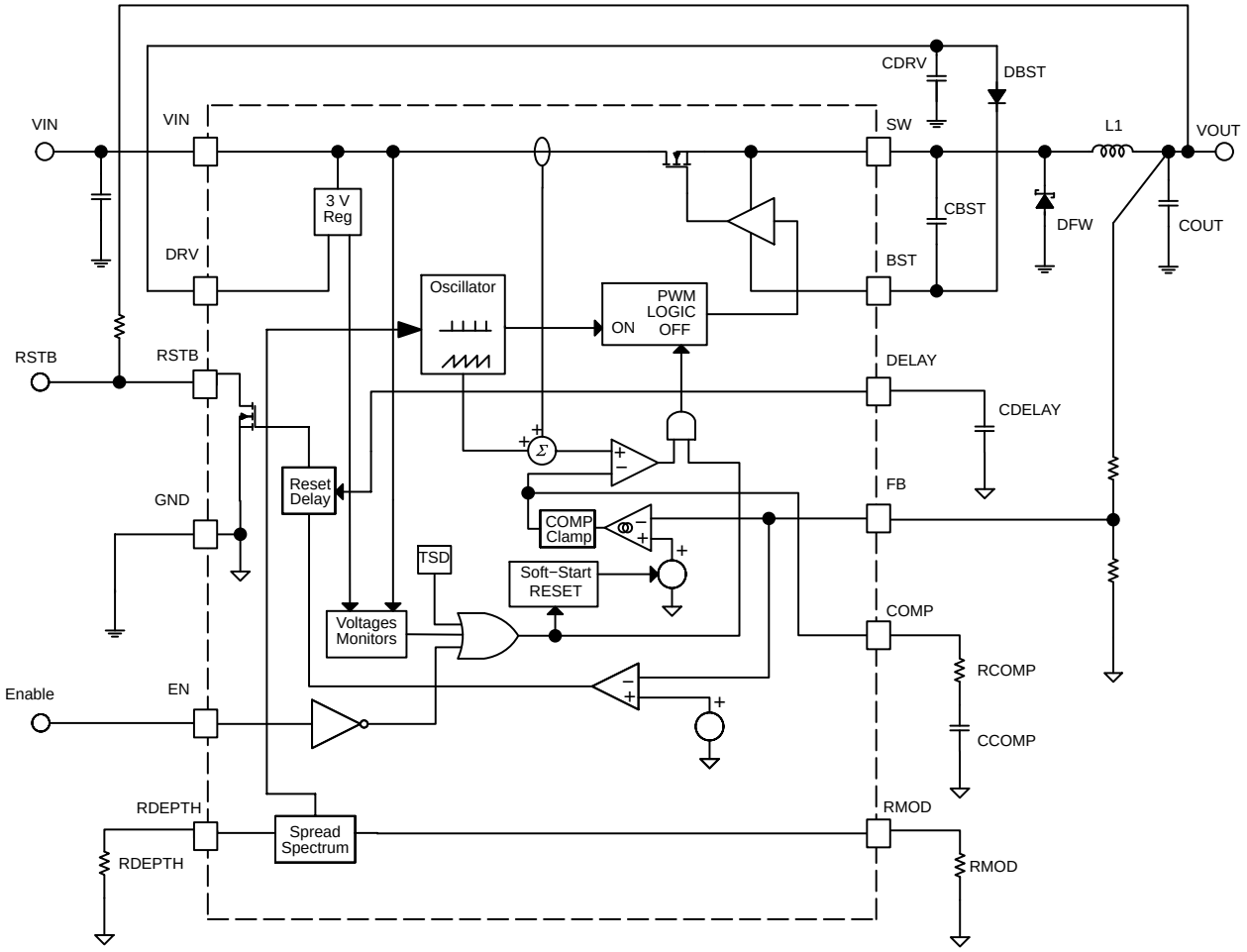

Figure 2. NCV890204 Block Diagram

TYPICAL APPLICATION

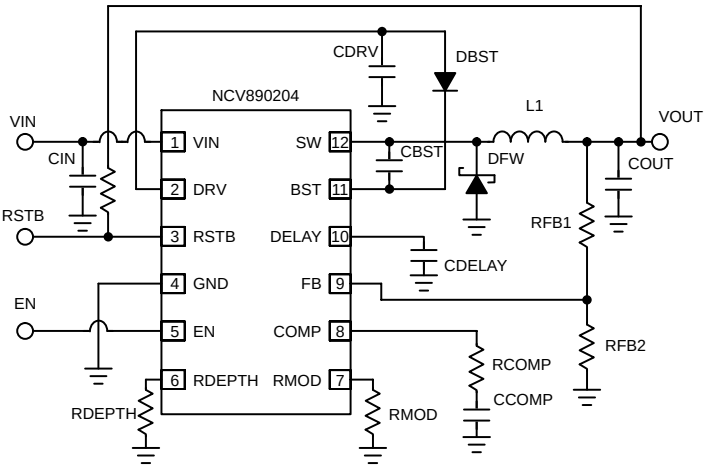

Figure 3. Typical Application

Table 1. EVALUATION BOARD TERMINALS

Pin Name	Function
VIN	Positive dc Input Voltage
GND	Common dc Return
VOUT	Positive dc Output Voltage
EN	Master Enable Input
RST3B	Reset with Adjustable Delay

Table 2. ABSOLUTE MAXIMUM RATINGS (Voltages are with respect to GND)

Rating	Value	Unit
Dc Supply Voltage (VIN, EN)	−0.3 to 40	V
Dc Supply Voltage (RSTB)	−0.3 to 6	V
Storage Temperature Range	−55 to +150	°C

Stresses exceeding those listed in the Maximum Ratings table may damage the device. If any of these limits are exceeded, device functionality should not be assumed, damage may occur and reliability may be affected.

Table 3. ELECTRICAL CHARACTERSITICS

Characteristic	Conditions	Typical Value	Unit
REGULATION			
Output Voltage (VOUT)		5.0	V
Line Regulation (VOUT)	I_{OUT} = 1.0 A	0.1	%
Load Regulation (VOUT)	V_{IN} = 13.2 V	0.1	%
SWITCHING			
Switching Frequency		2.0	MHz
Soft-start Time		1.4	ms
CURRENT LIMIT			
Peak Current Limit (VOUT)	EN = 5 V	3.25	A
PROTECTIONS			
Input Undervoltage Lockout (UVLO)	V_{IN} Decreasing	3.4	V
Thermal Shutdown	T_J Rising	170	°C

Product parametric performance is indicated in the Electrical Characteristics for the listed test conditions, unless otherwise noted. Product performance may not be indicated by the Electrical Characteristics if operated under different conditions.

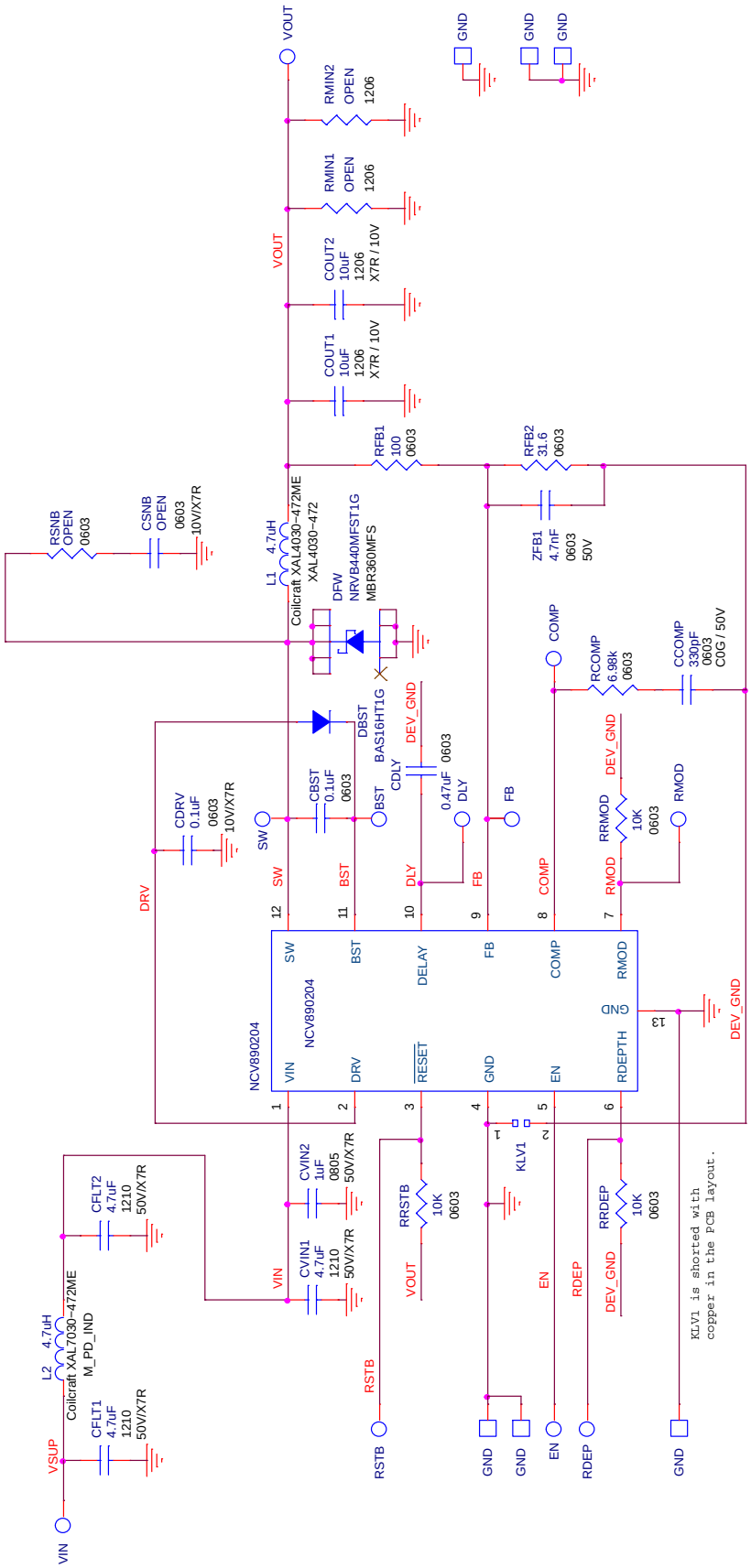

Figure 4. NCV890204GEVB Evaluation Board Schematic

OPERATIONAL GUIDELINES

1. Connect a dc input voltage, within the 6.0 V to 36 V range, between VIN and GND.
2. Connect a dc enable voltage, within the 2.0 V to 36 V range, between EN and GND. This will power up the switcher. The VOUT signal should be 3.3 V.
3. Add a load to VOUT – up to 2.0 A.

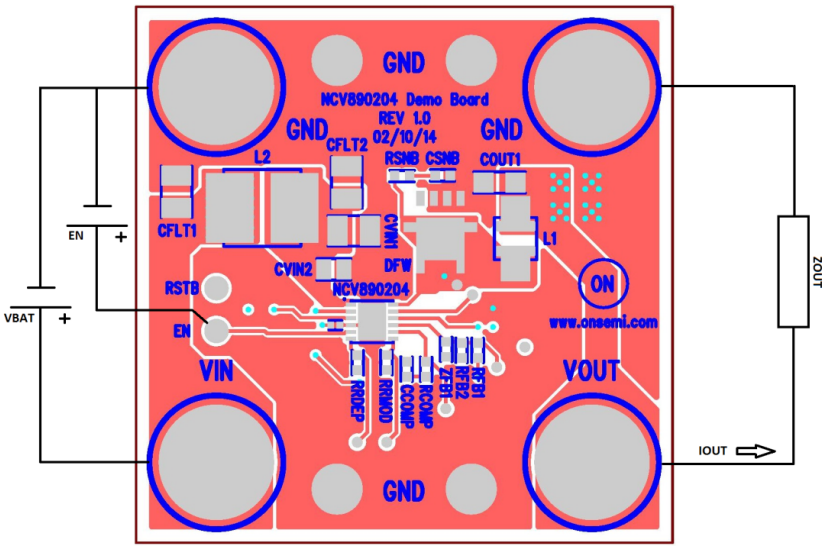

Figure 5. NCV890204 Board Connections

ADDITIONAL GUIDELINES

Output Voltage Selection

The voltage output for the switcher is adjustable and can be set with a resistor divider. The FB reference for the switcher is 0.8 V.

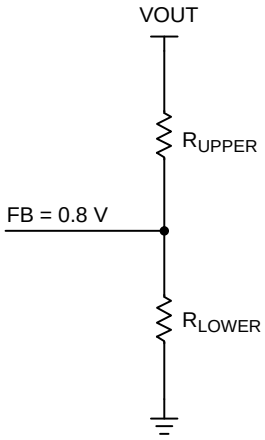

Use the following equation:

$$R_{UPPER} = R_{LOWER} \frac{V_{OUT} - V_{FB}}{V_{FB}}$$

Some common setups are listed below:

Desired Output (V)	VREF (V)	R_{UPPER} (kΩ, 1%)	R_{LOWER} (kΩ, 1%)
1.2	0.8	5.11	10.0
1.5	0.8	8.87	10.0
1.8	0.8	12.7	10.0
2.5	0.8	21.5	10.0
3.3	0.8	31.6	10.0
5.0	0.8	52.3	10.0

Spread Spectrum

In SMPS devices, switching translates to higher efficiency. Unfortunately, the switching leads to a much noisier EMI profile. We can greatly decrease some of the radiated emissions with some spread spectrum techniques. Spread spectrum is used to reduce the peak electromagnetic emissions of a switching regulator.

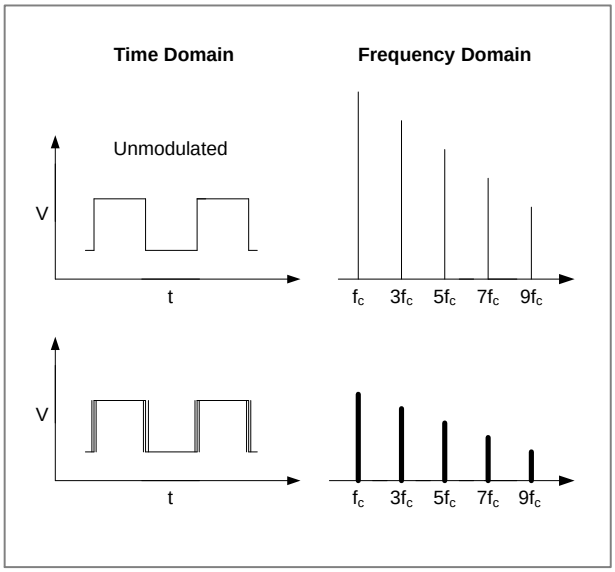

The spread spectrum used in the NCV890204 is an “up-spread” technique, meaning the switching frequency is spread upward from the 2.0 MHz base frequency. For example, a 5 % spread means that the switching frequency is swept (spread) from 2.0 MHz up to 2.1 MHz in a linear fashion – this is called the modulation depth. The rate at which this spread takes place is called the modulation frequency. For example, a 10 kHz modulation frequency means that the frequency is swept from 2.0 MHz to 2.1 MHz in 50 µs and then back down from 2.1 MHz to 2.0 MHz in 50 µs.

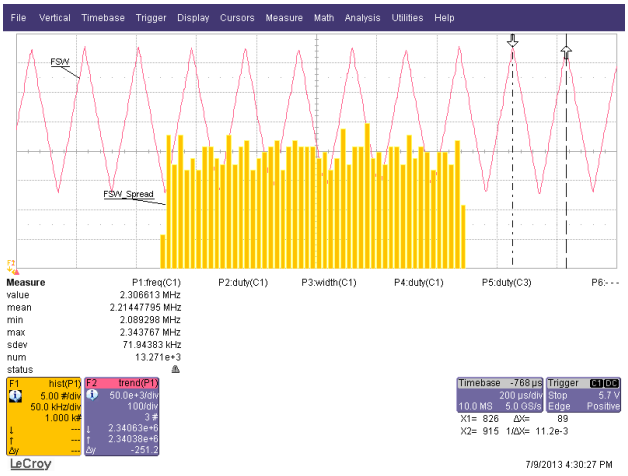

The modulation depth and modulation frequency are each set by an external resistor to GND. The modulation frequency can be set from 5 kHz up to 50 kHz using a resistor from the RMOD pin to GND. The modulation depth can be set from 3% up to 30% of the nominal switching frequency using a resistor from the RDEPTH pin to GND. Please see the curves below for typical values:

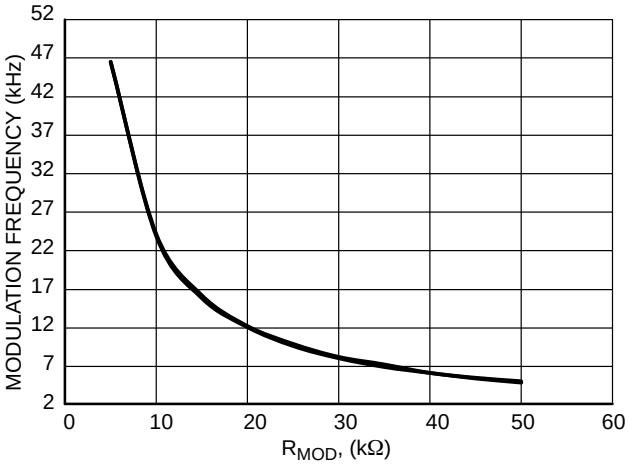

Figure 6. Modulation Frequency vs. RMOD Value

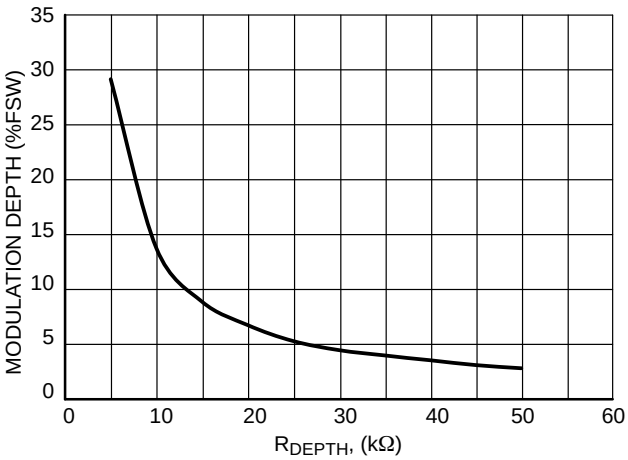

Figure 7. Modulation Depth vs. RDEPTH Value

Spread spectrum is automatically turned off when there is a short to GND or an open circuit on either the RMOD pin or the RDEPTH pin. Please be sure that the ROSC pin is an open circuit when using spread spectrum.

TYPICAL PERFORMANCE

Efficiency

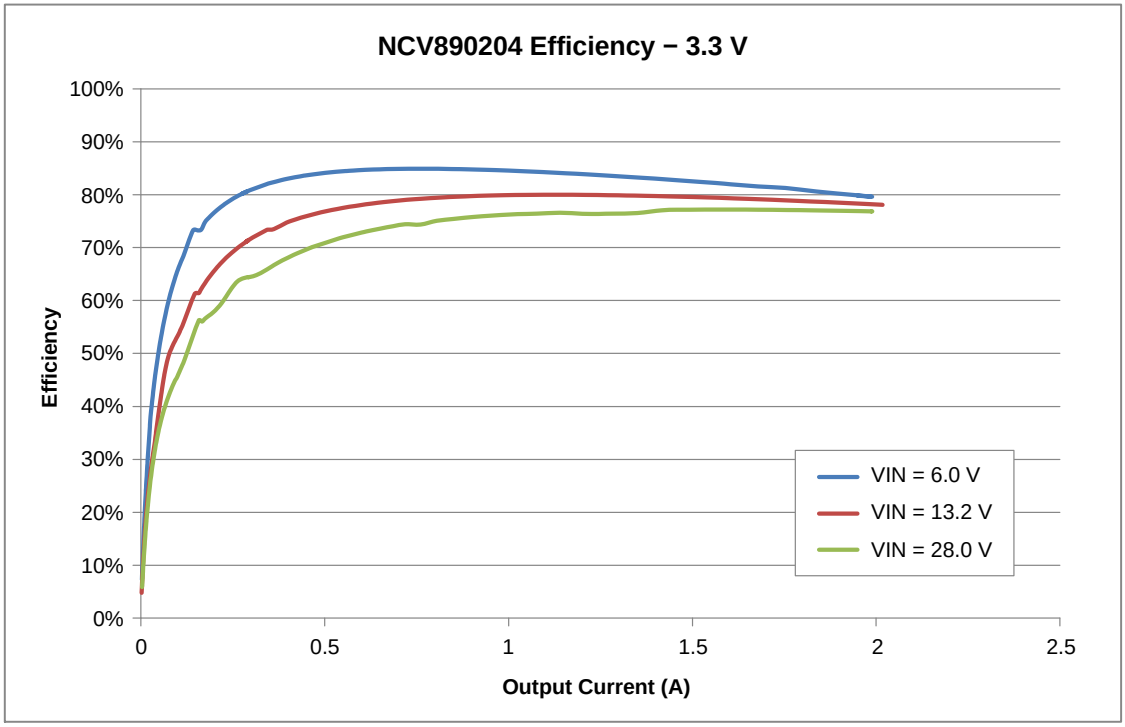

Figure 8. Efficiency with a 3.3 V Output

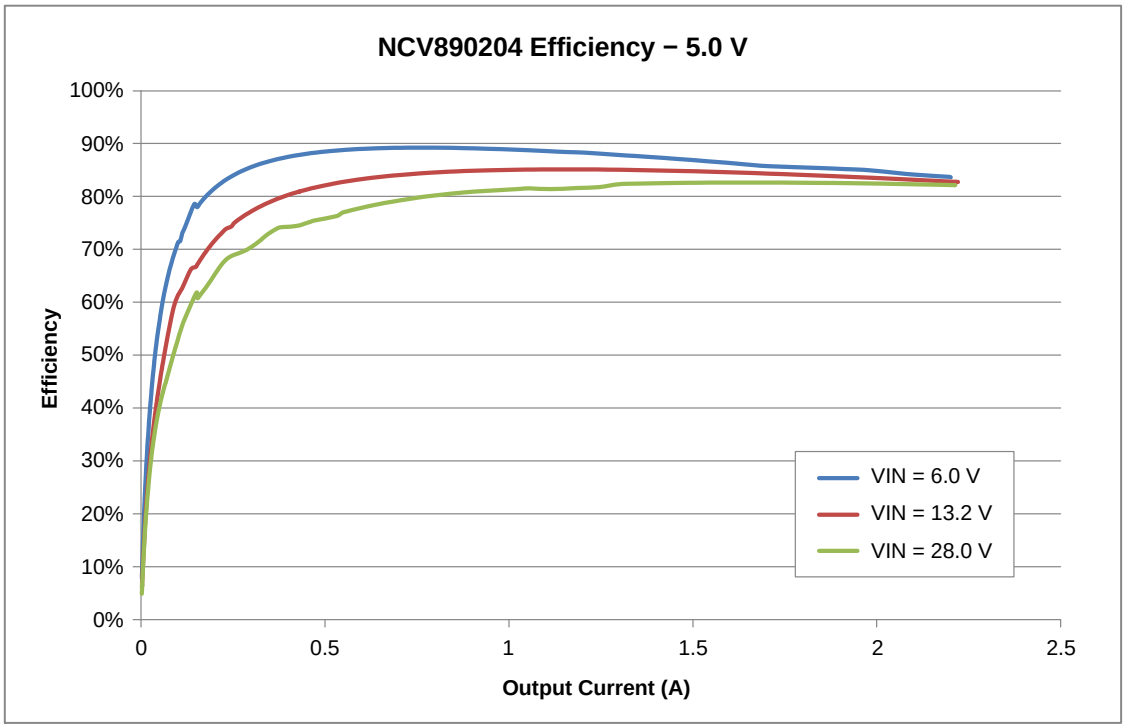

Figure 9. Efficiency with a 5.0 V Output

Line Regulation

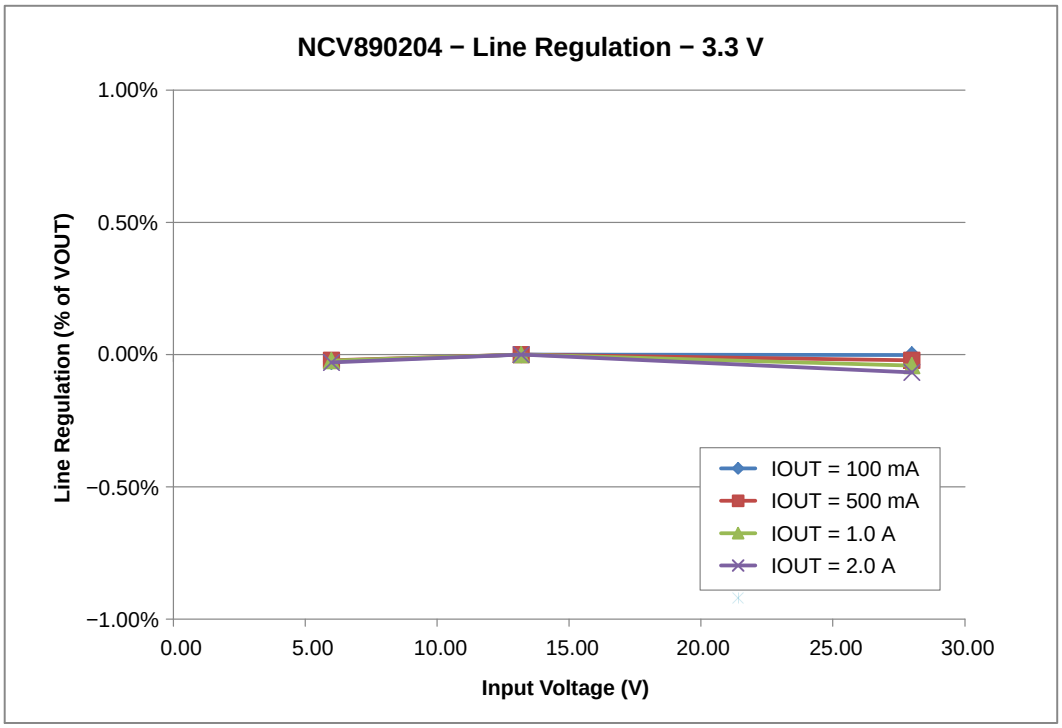

Figure 10. Line Regulation for a 3.3 V Output

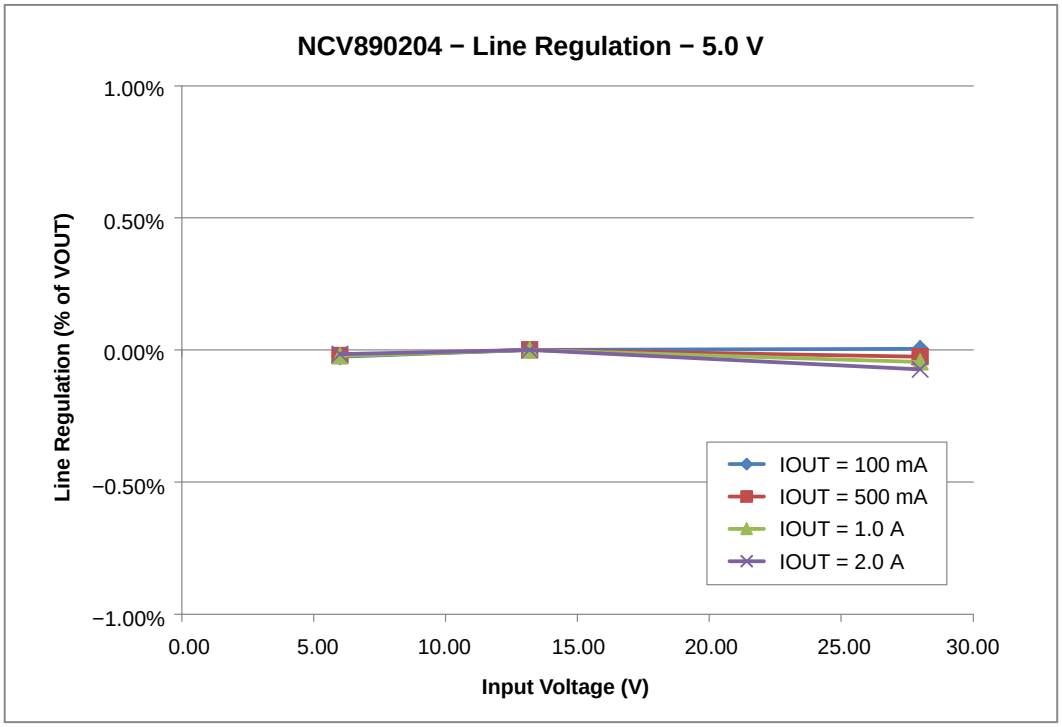

Figure 11. Line Regulation for a 5.0 V Output

Load Regulation

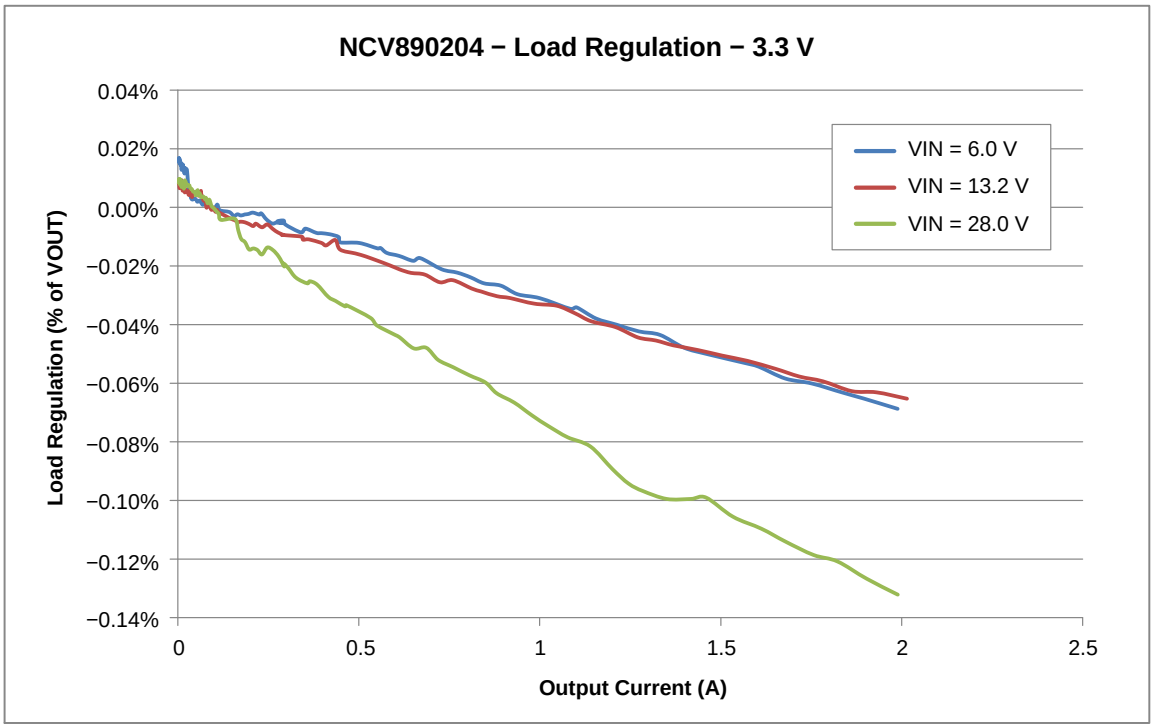

Figure 12. Load Regulation with a 3.3 V Output

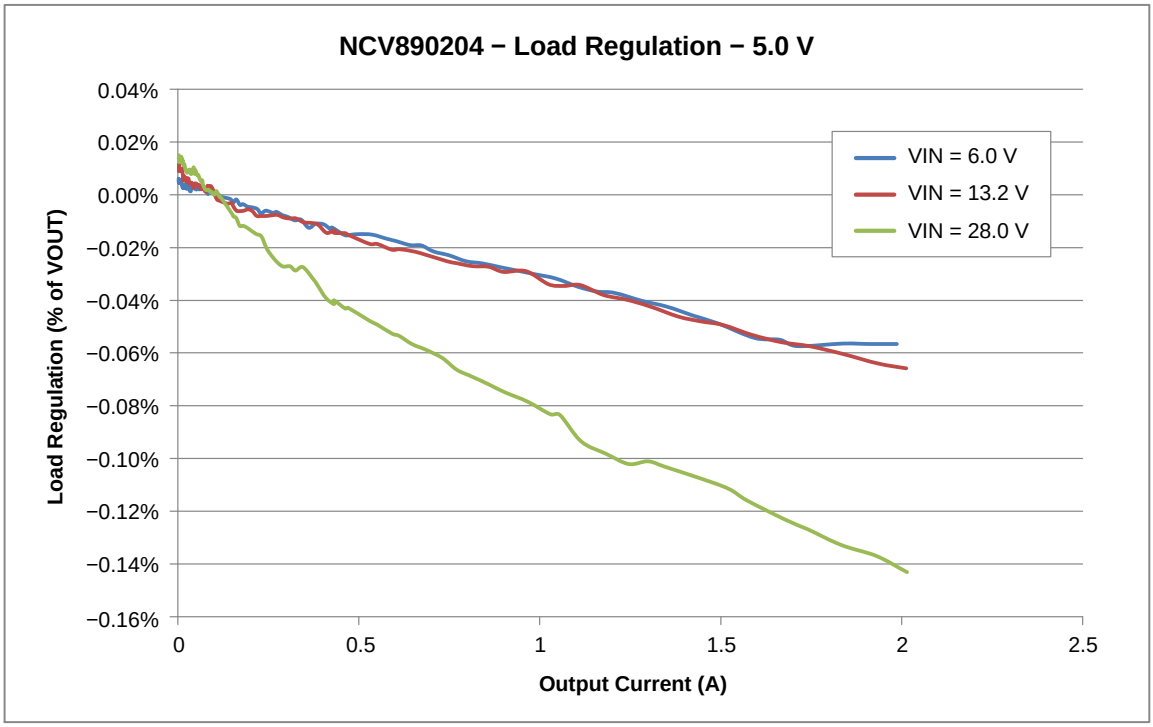

Figure 13. Load Regulation with a 5.0 V Output

SCHEMATIC

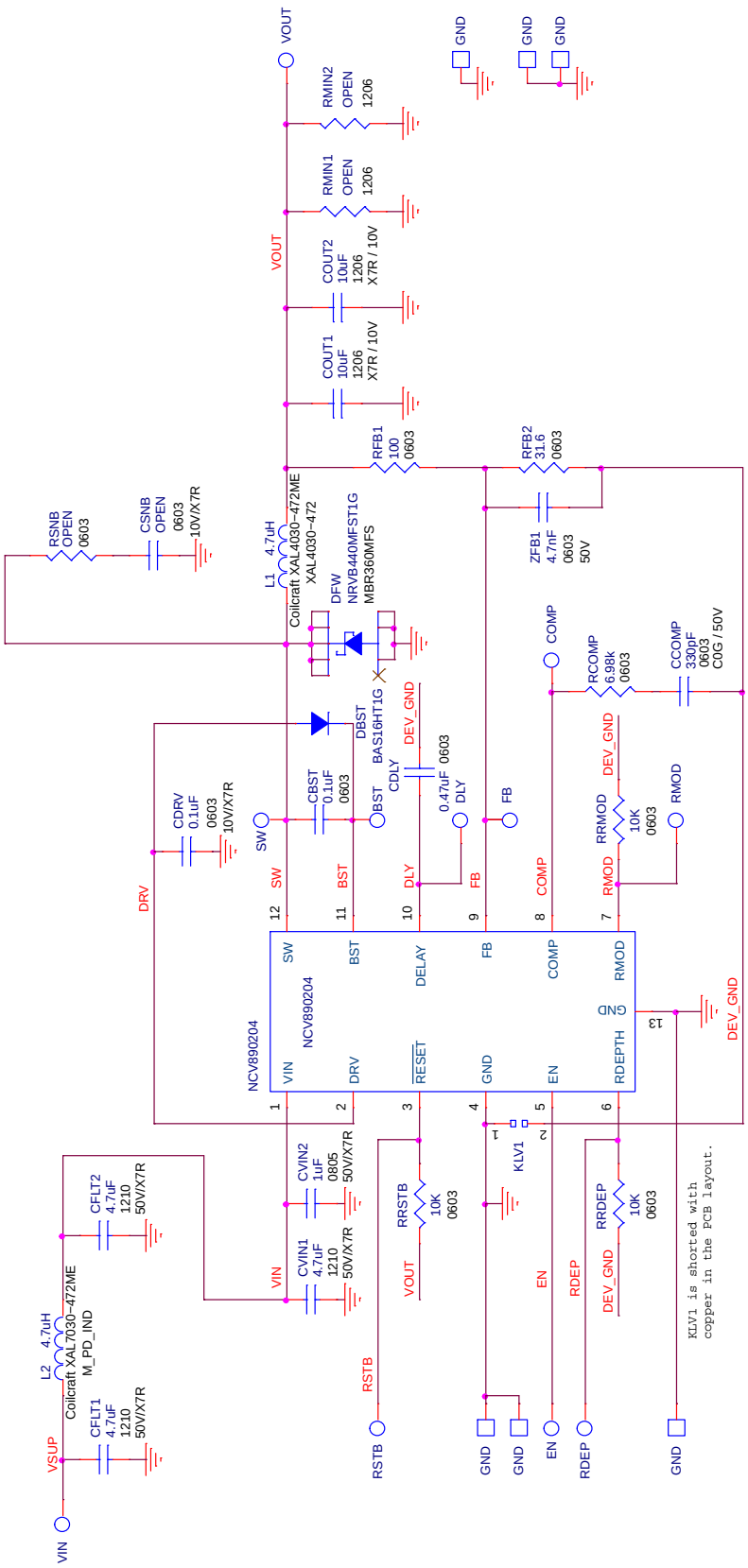

Figure 14. Schematic

PCB LAYOUT

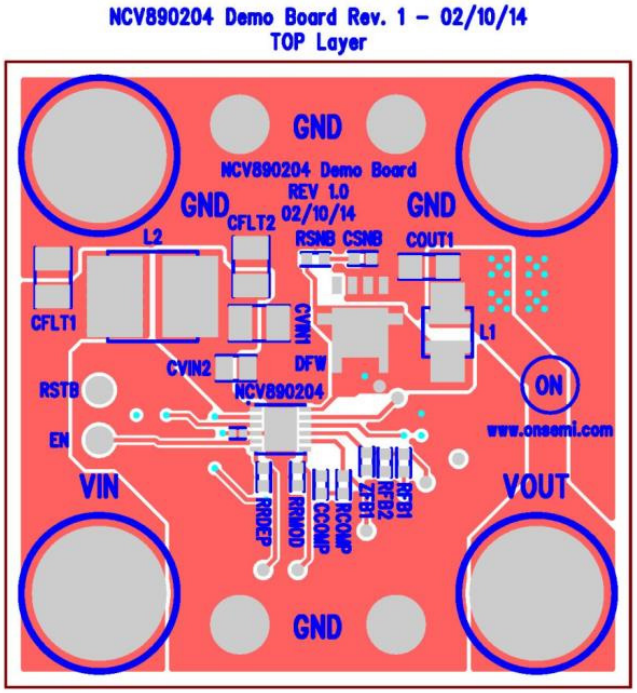

Figure 15. Top View

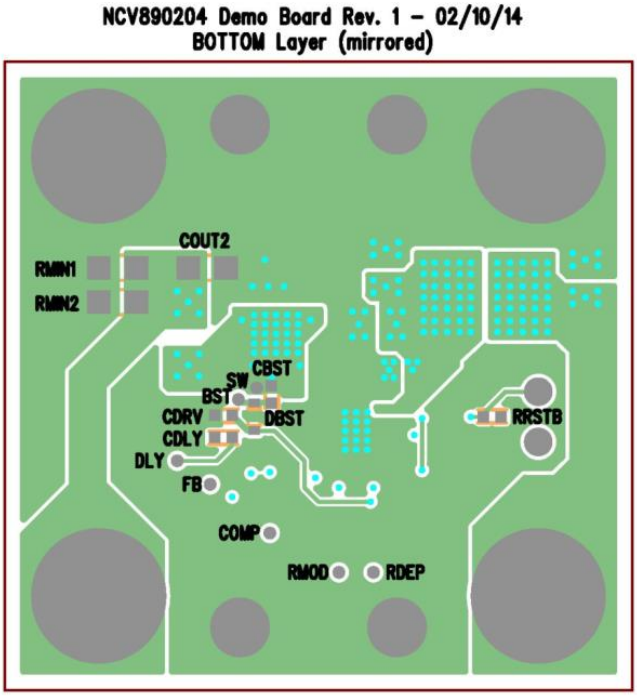

Figure 16. Bottom View

BILL OF MATERIALS

Table 4. BILL OF MATERIALS

Reference Designator(s)	Qty.	Description	Value	Tolerance	Footprint	Manufacturer	Manufacturer's Part Number	Substi-tution Allowed
CBST, CDRV	2	CAP .10 μF 10 V CERAMIC X7R 0603	0.1 μF	10%	603	Kemet	C0603C104K8RACTU	Yes
CCOMP	1	CAP CER 330 pF 50 V C0G 0603	330 pF	10%	603	Murata Electronics North America	GCM1885C1H331JA16D	Yes
CDLY	1	CAP CER 0.47 μF 25 V 10% X7R 0603	0.47 μF	10%	603	Murata Electronics North America	GCM188R71E474KA64D	Yes
CFLT1, CFLT2, CVIN1	3	CAP CER 4.7 μF 50 V 10% X7R 1210	4.7 μF	10%	1210	Murata Electronics North America	GRM32ER71H475KA88L	Yes
COUT1, COUT2	2	CAP CER 10 μF 10 V X7R 1206	10 μF	10%	1206	Murata Electronics North America	GRM31CR71A106KA01L	Yes
CVIN2	1	CAP CER 1.0 μF 50 V X5R 0805	1.0 μF	10%	805	Murata Electronics North America	UMK212BJ105KG-T	Yes
DBST	1	DIODE SWITCH 200 mA 75 V SOD323	75 V/0.2 A	N/A	SOD_323	ON Semiconductor	BAS16HT1G	No
DFW	1	DIODE SCHOTTKY 4.0 A 40 V SMB	40 V/4.0 A	N/A	SMB_DIODE	ON Semiconductor	NRVB440MFST1G	No
L1	1	INDUCTOR POWER 4.7 μH 4.5 A SMD	4.7 μH	4.5A	XAL4030-472	Coilcraft	XAL4030-472ME	No
L2*	1	RES 0.0 Ω 1/4 W JUMP 1206 SMD	0 Ω	5%	1206	Yageo	RC1206JR-070RL	Yes
RCOMP	1	RES 6.98 kΩ 1/10 W 1% 0603 SMD	6.98 kΩ	1%	603	Vishay/Dale	CRCW06036K98FKEA	Yes
RFB1	1	RES 100 Ω 1/10 W 1% 0603 SMD	100 Ω	1%	603	Vishay/Dale	CRCW0603100RFKEA	Yes
RFB2	1	RES 31.6 Ω 1/10 W 1% 0603 SMD	31.6 Ω	1%	603	Vishay/Dale	CRCW060331R6FKEA	Yes
RRDEP, RRMOD, RRSTB	3	RES 10.0 kΩ OHM 1/10 W 1% 0603 SMD	10.0 kΩ	1%	603	Vishay/Dale	CRCW060310K0FKEA	Yes
ZFB1	1	CAP CER 4700 pF 50 V 10% X7R 0603	4700 pF	10%	603	Murata Electronics North America	GRM188R71H472KA01D	Yes
CSNB	1		Do Not Populate		603			Yes
RMIN1, RMIN2	2		Do Not Populate		1206			Yes
RSNB	1		Do Not Populate		603			Yes
BST, COMP, DLY, FB, RDEP, RMOD, SW	7	CIRCUIT PIN PRNTD .020″D .425″L	Do Not Populate	N/A	TPA	Mill-Max Manufacturing Corp.	3128-2-00-15-00-00-08-0	Yes
GND1, GND2, VIN, VOUT	4	CONN JACK BANANA UNINS PANEL MOU	N/A	N/A	BANANA	Emerson Network Power Connectivity Soultions	108-0740-001	Yes

Table 4. BILL OF MATERIALS (continued)

Reference Designator(s)	Qty.	Description	Value	Tolerance	Footprint	Manufacturer	Manufacturer's Part Number	Substi-tution Allowed
GND3−GND6	4	TERM SOLDER TURRET .219″ .109″L	N/A	N/A	TURRET	Mill-Max Manufacturing Corp.	2501-2-00-44-00-00-07-0	Yes
EN, RSTB	2	PIN INBOARD .042″ HOLE 1000/PKG	N/A	N/A	TP	Vector Electronics	K24C/M	Yes
NCV890204	1	1.2 A 2 MHz Automotive Buck Switching Regulator	NCV890204	N/A	12PINDFN4x4p65	ON Semiconductor	NCV890204MWR2G	No

*L2 is a placeholder footprint for an optional input inductor filter component. Boards are shipped with a shorting jumper installed to complete the input path.

NOTE: All devices are RoHS Compliant.

PUBLICATION ORDERING INFORMATION

LITERATURE FULFILLMENT:
Literature Distribution Center for ON Semiconductor
P.O. Box 5163, Denver, Colorado 80217 USA
Phone: 303−675−2175 or 800−344−3860 Toll Free USA/Canada
Fax: 303−675−2176 or 800−344−3867 Toll Free USA/Canada
Email: orderlit@onsemi.com

N. American Technical Support: 800−282−9855 Toll Free USA/Canada
Europe, Middle East and Africa Technical Support:
Phone: 421 33 790 2910
Japan Customer Focus Center
Phone: 81−3−5817−1050

ON Semiconductor Website: **www.onsemi.com**

Order Literature: http://www.onsemi.com/orderlit

For additional information, please contact your local Sales Representative