Test Procedure for the LB1843VGEVB Evaluation Board

09/08/2012

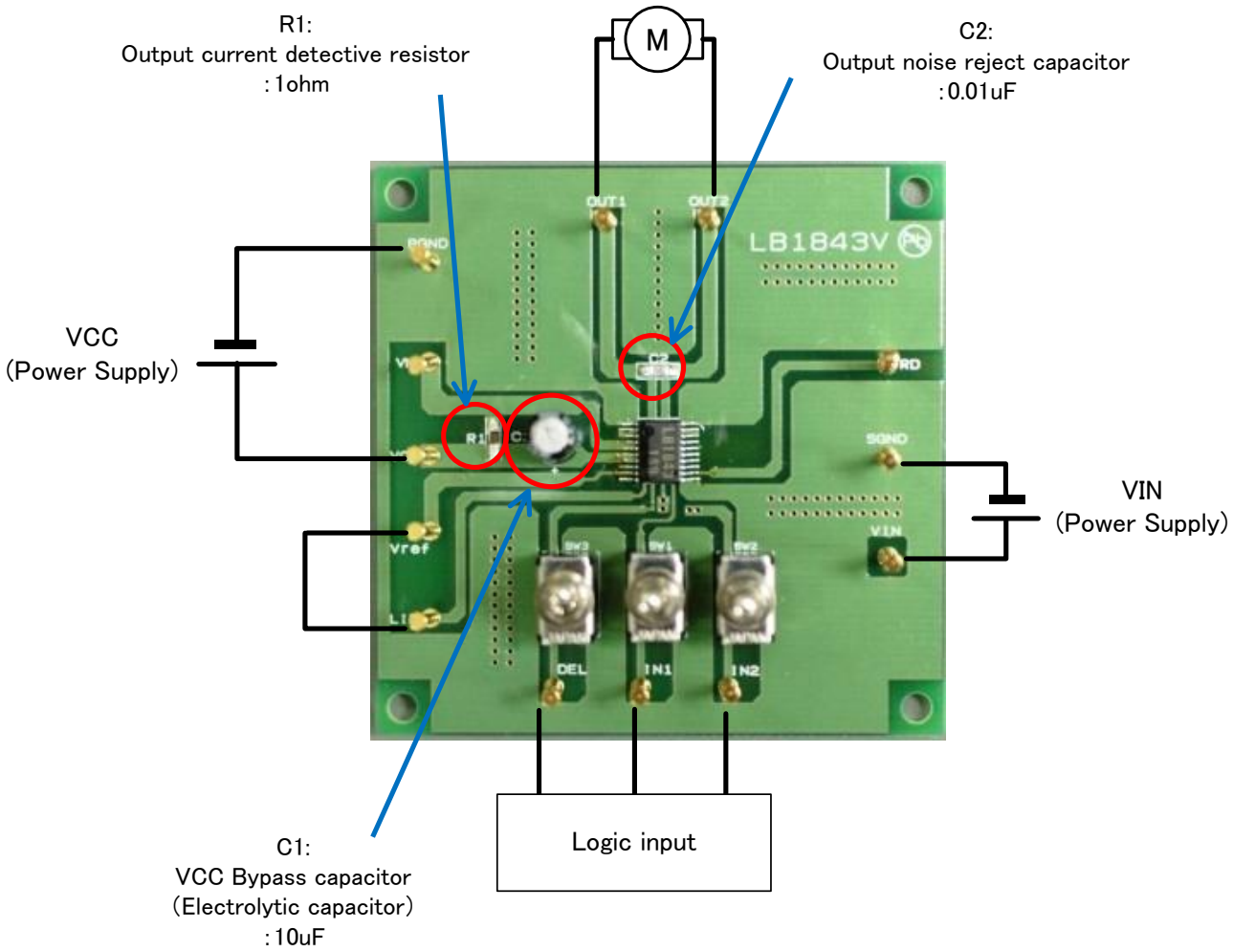

(Circuit diagram of the evaluation board)

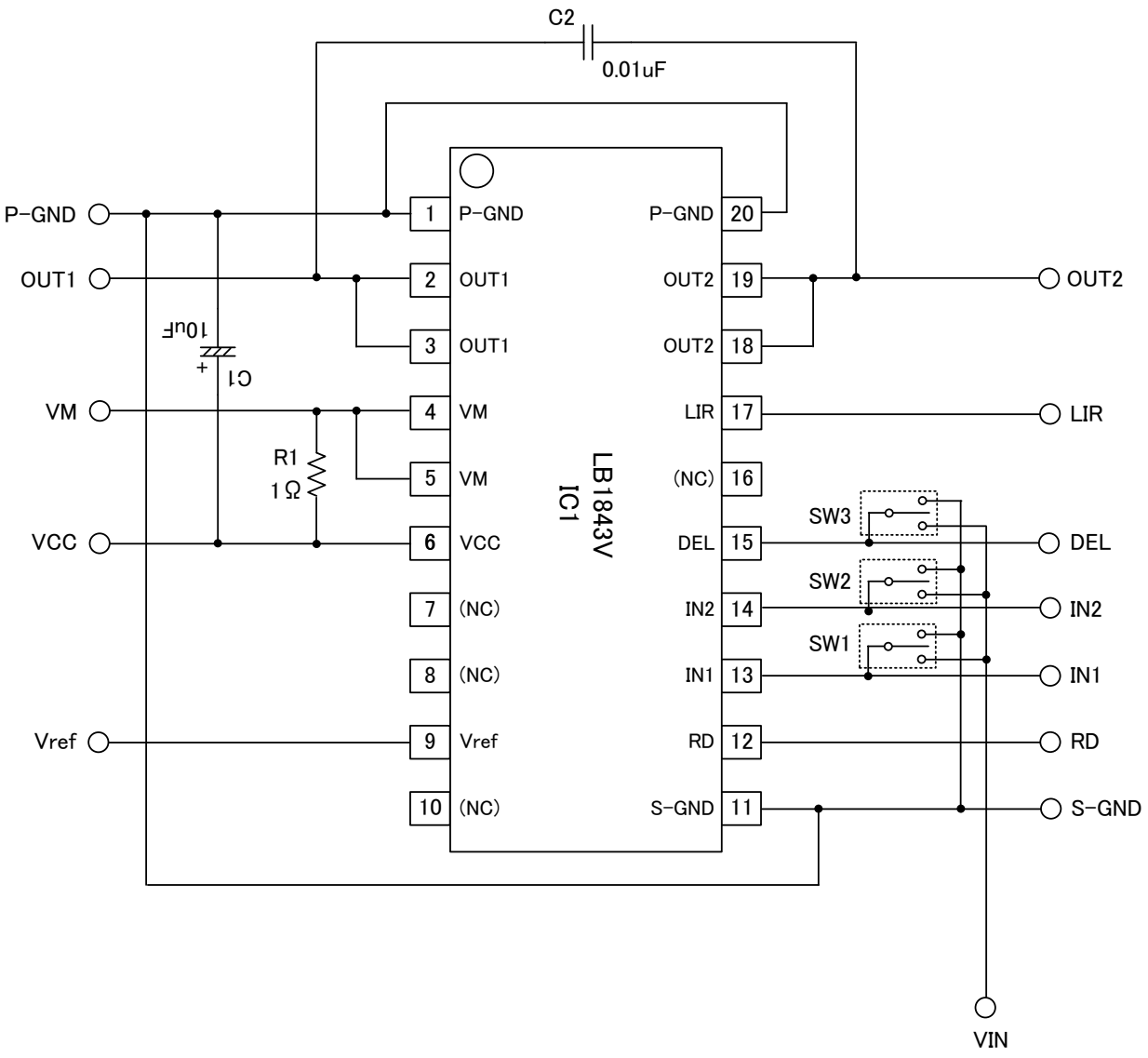

Evaluation Board Manual

[Supply Voltage] VCC (3 to 9V): Power Supply for LSI

[Toggle Switch State] Upper Side: High (VIN)
Middle: Open, enable to external logic input
Lower Side: Low (GND)

[Operation Guide]
For DC motor control

1. **Initial Condition Setting:** Set the toggle switchs "Open or Low"
2. **Motor Connection:** Connect the Motor between OUT1 and OUT2.
3. **Power Supply:** Supply DC voltage to VCC, VIN.
4. **Motor Operation:** Set DEL, IN1 and IN2 terminals according to the purpose (See LB1843V datasheet).

Truth Table

Input		Output		Mode
IN1	IN2	OUT1	OUT2	
L	L	Off	Off	Standby
H	L	H	L	Forward
L	H	L	H	Reverse
H	H	L	L	Brake

Output Current Limitation and Detector Output

DEL	OUT output	RD
H	Limit	L
	Non-limit	Off
L	Saturated	Off

DC motor load
VCC=3V, IN2="L"
Current waveform example
"motor start"

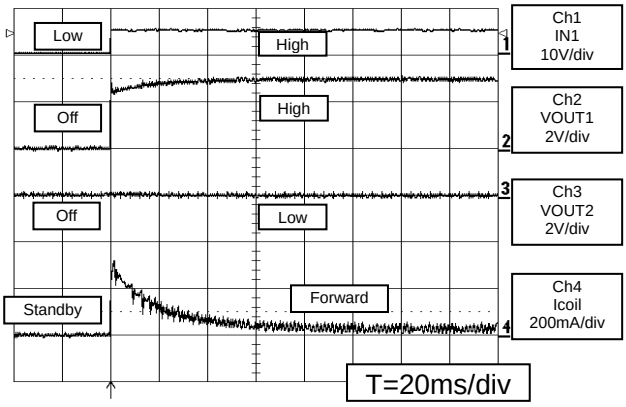

DC motor load
VCC=3V, IN1="H"
Current waveform example
"Forward current" and "Brake current"

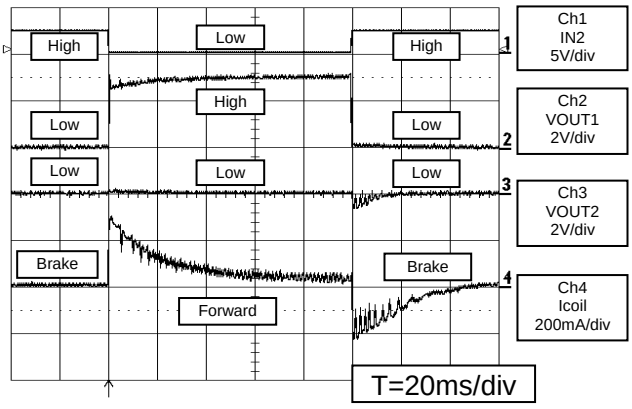

Sample application timing chart

1) Connect a DC motor (RL = R) between OUT1 and OUT2, and with the RD pin pulled up, input a forward rotation signal (IN1 = high, IN2 = low).
   Because the output is used in the saturated state at startup, set the DEL input to low.
2) The DC motor starts up, and the startup current (IST = VM/R) flows to the motor.
3) The DC motor rotates in the normal state. At this point, set the DEL input to high.
4) If the DC motor locks, the motor current IM increases to the point of Ilimit (= VLIR/(10Rf)), the output current limiter operates to limit the output current. At the same time, RD is output low from the set current detection circuit.