Test Procedure for the NCP59744MN2ADJGEVB Evaluation Board

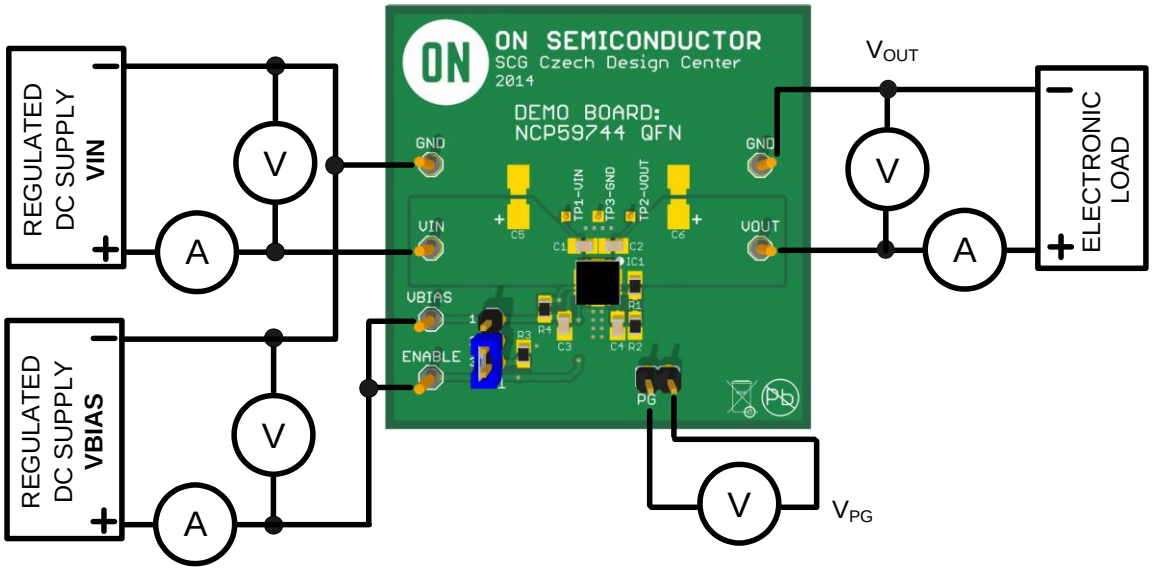

Figure 1: Test Setup

Test Procedure

1. Connect the test setup as shown in Figure 1.
2. Apply supply voltage Vin = 1.5 V
3. Apply supply voltage Vbias = 5.0 V
4. Apply Iout = 10 mA load.
5. Check that Vout is 1.2 V
6. Increase Iout load current to 3.0 A
7. Check that Vout is 1.2 V
8. Decrease Iout load current to 10 mA
9. Check that voltage on PG output V_{PG} is 5 V
10. Decrease Vin voltage to 0.9 V
11. Check that voltage on PG output $V_{PG} < 0.1$ V
12. Power down the load
13. Power down Vin and Vbias supply
14. End of test