ON Semiconductor®

Test Procedure for the NCV47551DAJGEVB Evaluation Board

1. Connect the test setup as is shown in **Figure 1**. See **Table 1** with required equipment.
   - Letter **F** – Force line
   - Letter **S** – Sense line

2. Select output current limit by connecting jumper $\mathbf{J_0 – J_3}$.
   - $\mathbf{J_0}$ – I_{LIM0} ~ 100 µA
   - $\mathbf{J_1}$ – I_{LIM1} ~ 10 mA
   - $\mathbf{J_2}$ – I_{LIM2} ~ 20 mA
   - $\mathbf{J_3}$ – I_{LIM3} – R_{CSO3} position available for individual current limit setting by resistor from range 127.5 Ω to 25.5 kΩ

3. Set Input Voltage and turn on Power Supply.

4. Enable chip by connecting external Voltage Source on appropriate EN jumper. Enable voltage must be higher than 2.31 V.

5. Set load current (max 20 mA) and turn ON Load.

6. Monitor Output voltage, it's given according to Equation 1.

$$V_{out} = 1.265\left(1 + \frac{R_1}{R_2}\right) \qquad \text{(eq. 1)}$$

7. Monitor CSO voltage on appropriate CSO connector. It should be max 2.55 V in steady state. The CSO voltage is proportional to output current according to Equation 2.

$$V_{CSO} = I_{out} \times R_{CSO} \qquad \text{(eq. 2)}$$

8. Compare your results with measured results in **Table 2.**

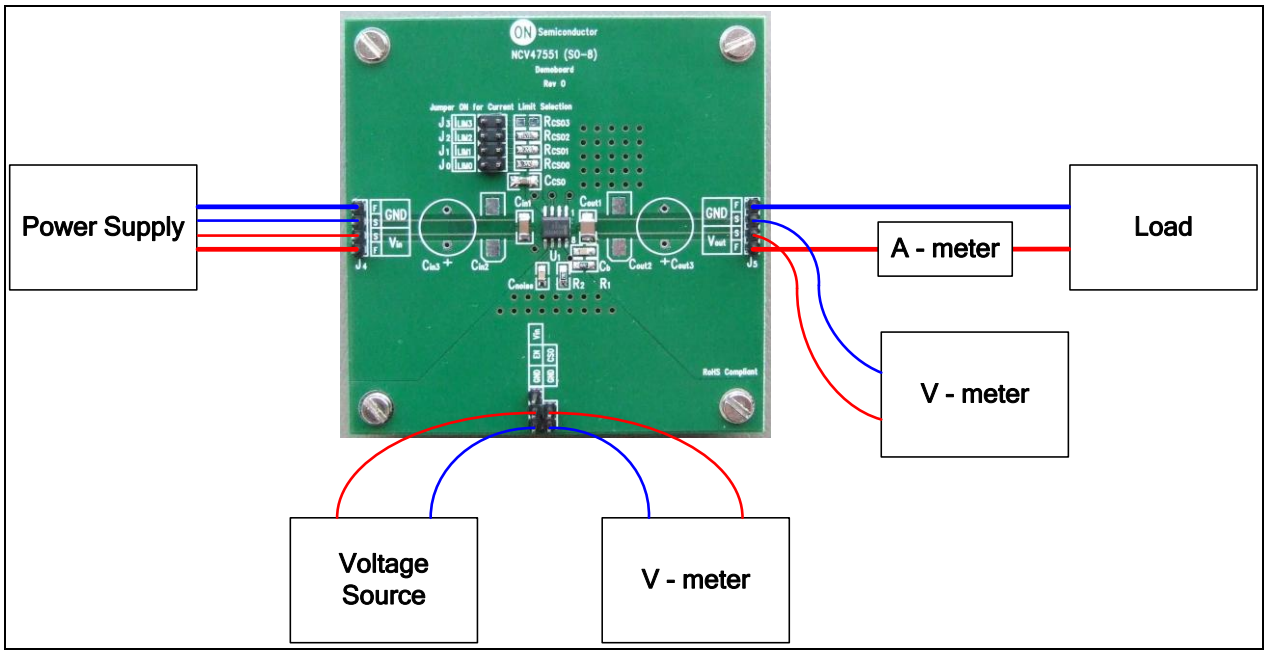

Figure 1. Test Setup

Table 1: Required Equipment

Equipment	Ranges
Power Supply	0 V – 45 V / 100 mA
Voltage Source	0 V – 45 V
Load	0 mA – 100 mA
V - meter	0 V – 20 V
A - meter	0 mA – 100 mA

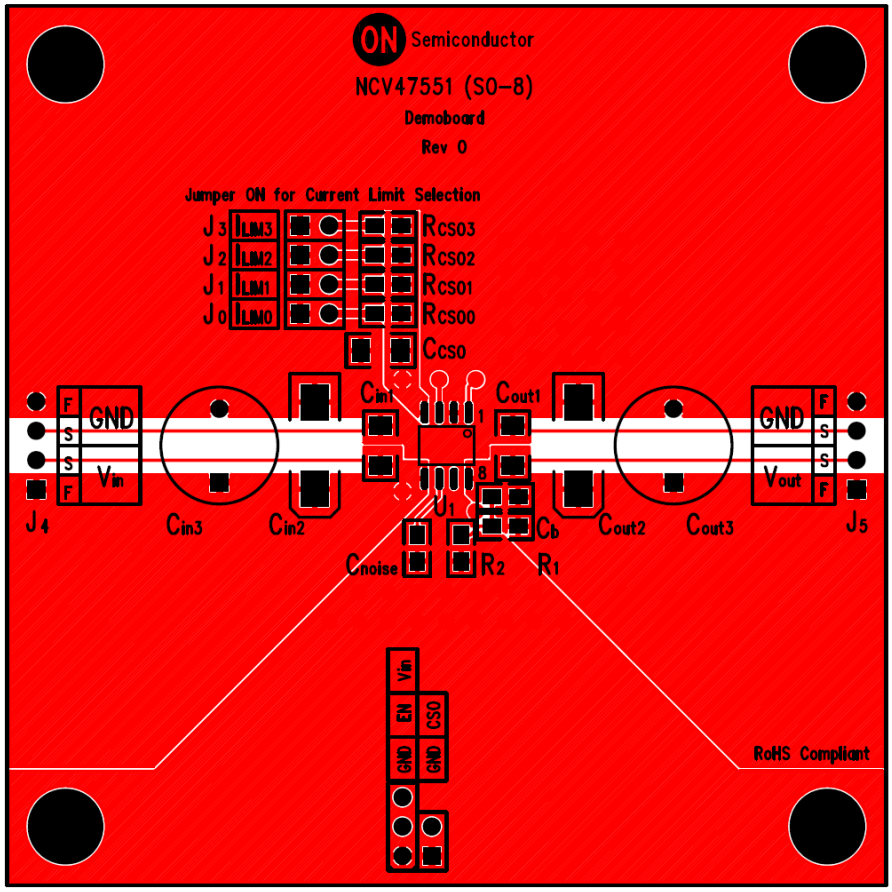

Figure 2. PCB Layout

Table 2: Measured Results

Parameter	Test Conditions	Value		Unit
		Nominal	Measured	
Output Voltage	V_{in} = 13.5 V, V_{out_nom} = 5.1 V, I_{out} = 0.1 mA, R_{CSO} = Short to ground	5.1	5.11	V
	V_{in} = 13.5 V, V_{out_nom} = 5.1 V, I_{out} = 20 mA, R_{CSO} = Short to ground	5.1	5.12	
Output Current	V_{in} = 13.5 V, V_{out_nom} = 5.1 V, V_{out} = 0 V, R_{CSO} = 24.9 kΩ	0.102	0.11	mA
	V_{in} = 13.5 V, V_{out_nom} = 5.1 V, V_{out} = 0 V, R_{CSO} = 249 Ω	10.2	10.6	
	V_{in} = 13.5 V, V_{out_nom} = 5.1 V, V_{out} = 0 V, R_{CSO} = 127 Ω	20	20.8	
PSRR	I_{out} = 1 mA, R_1 = 82 kΩ, R_2 = 27 kΩ, C_{in} = none, C_b = 10 nF, C_{noise} = 10 nF, f = 100 Hz, 0.5 V_{p-p}	80	86.4	dB
	I_{out} = 1 mA, R_1 = 82 kΩ, R_2 = 27 kΩ, C_{in} = none, C_b = 10 nF, C_{noise} = 10 nF, f = 1 kHz, 0.5 V_{p-p}	70	89	