ON Semiconductor®

PCS3P7100A

Custom Clock Generator for Display Systems

Features

- Custom Clock Generator for Display Systems
- Wide Operating Frequency Range covering most of the pixel frequencies
- Generates a low EMI 1x Output
- 4 Spread Deviation selection options
- Supply voltage : 3.3V ± 0.3V
  2.5V ± 0.125V
- Frequency range:
  3.3V: 20 MHz-130 MHz
  2.5V: 30 MHz-130 MHz
- 6L-TSOT23 (6L- SOT26) package

Product Description

PCS3P7100A is a versatile spread spectrum modulator designed specifically for a wide range of clock frequencies. The device addresses the need of a low EMI clock generator for use in display systems covering wide choice of pixel frequencies.

PCS3P7100A reduces electromagnetic interference (EMI) at the clock source, allowing system wide reduction of EMI of all clock dependent signals. PCS3P7100A allows significant system cost savings by reducing the number of circuit board layers, ferrite beads, shielding that are traditionally required to pass EMI regulations.

The Supply Voltage of the Device is 3.3V/2.5V. It has two Spread Selection Pins, SS1% and SS2%. Refer to the *Spread Deviation Selection Table* for details.The Device is available in 6L-TSOT23 Package.

Application

PCS3P7100A is targeted for use in Display Systems.

Block Diagram

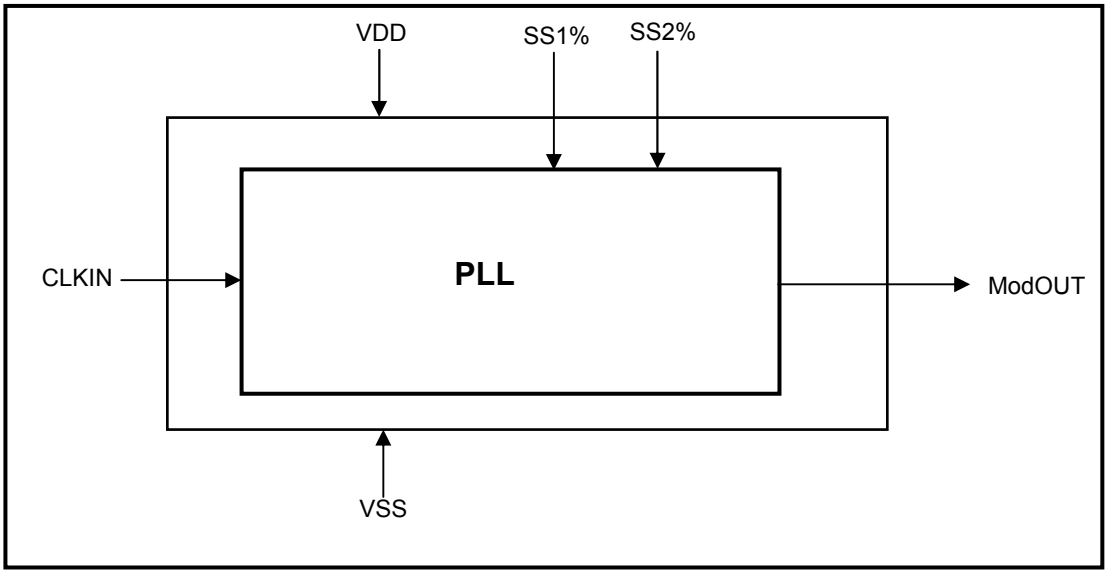

NOVEMBER 2010 – Rev. 1.1

Publication Order Number:
PCS3P7100/D

Pin Configuration (6L-TSOT23 Package)

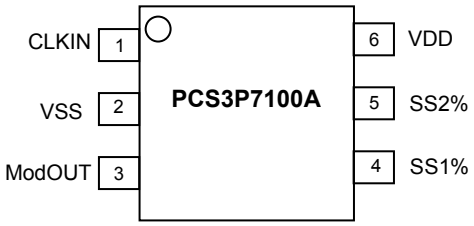

Pin Description

Pin#	Pin Name	Type	Description
1	CLKIN	I	External Reference Input frequency.
2	VSS	P	Ground to entire chip.
3	ModOUT	O	Modulated Frequency Output.
4	SS1%	I	Spread Deviation Selection Pin -1. Refer to *Spread Deviation Selection Table* for details. Has an Internal pull-up resistor.
5	SS2%	I	Spread Deviation Selection Pin -2. Refer to *Spread Deviation Selection Table* for details. Has an Internal pull-up resistor.
6	VDD	P	Power to entire chip.

Spread Deviation Selection Table

SS2% Pin	SS1% Pin	Spread Deviation @ 72MHz
L	L	±1.50%
L	H	±1.25%
H	L	±0.75%
H	H	±1.00%

Absolute Maximum Ratings

Symbol	Parameter	Rating	Unit
V_{DD}, V_{IN}	Voltage on any pin with respect to Ground	-0.5 to +4.6	V
T_{STG}	Storage temperature	-65 to +125	℃
T_s	Max. Soldering Temperature (10 sec)	260	℃
T_J	Junction Temperature	150	℃
T_{DV}	Static Discharge Voltage (As per JEDEC STD22- A114-B)	2	KV
Note: These are stress ratings only and are not implied for functional use. Exposure to absolute maximum ratings for prolonged periods of time may affect device reliability.			

Operating Conditions for 2.5V and 3.3V Supply Voltage

Parameter	Description	Min	Max	Unit
$V_{DD(2.5)}$	Supply Voltage	2.375	2.625	V
$V_{DD(3.3)}$		3.0	3.6	
T_A	Operating Temperature (Ambient Temperature)	-40	+85	℃
C_L	Load Capacitance		15	pF

DC Electrical Characteristics for 2.5V Supply

Symbol	Parameter	Min	Typ	Max	Unit
V_{IL}	Input low voltage	VSS - 0.3		0.7	V
V_{IH}	Input high voltage	1.7		VDD + 0.3	V
I_{IL}	Input low current			-35	µA
I_{IH}	Input high current			35	µA
V_{OL}	Output low voltage (VDD = 2.5V, I_{OL} = 8mA)			0.6	V
V_{OH}	Output high voltage (VDD = 2.5V, I_{OH} = -8mA)	1.8			V
I_{DD}	Static supply current[1]			4	mA
I_{CC}	Dynamic supply current (2.5V and no load)		11		mA
V_{DD}	Operating voltage	2.375	2.5	2.625	V
t_{ON}	Power-up time (first locked cycle after power-up)			5	mS
C_{IN}	Input Capacitance		5		pF
Z_{OUT}	Output Impedance		40		Ω
Note: 1. CLKIN pin is pulled low.					

AC Electrical Characteristics for 2.5V Supply

Symbol	Parameter	Min	Typ	Max	Unit
CLKIN	Input frequency	30		130	MHz
ModOUT	Output frequency	30		130	MHz
t_{LH}[1]	Output rise time (measured from 0.7V to 1.7V)		2.2		nS
t_{HL}[1]	Output fall time (measured from 1.7V to 0.7V)		1.2		nS
t_{JC}	Jitter (Cycle-to-cycle)		±250		pS
t_D	Output duty cycle	40	50	60	%

Note: 1. t_{LH} and t_{HL} are measured into a capacitive load of 15pF.

DC Electrical Characteristics for 3.3V Supply

Symbol	Parameter	Min	Typ	Max	Unit
V_{IL}	Input low voltage	VSS - 0.3		0.8	V
V_{IH}	Input high voltage	2.0		VDD + 0.3	V
I_{IL}	Input low current			-35	µA
I_{IH}	Input high current			35	µA
V_{OL}	Output low voltage (VDD = 3.3V, I_{OL} = 8mA)			0.4	V
V_{OH}	Output high voltage (VDD = 3.3V, I_{OH} = -8mA)	2.5			V
I_{DD}	Static supply current[1]			4.5	mA
I_{CC}	Dynamic supply current (3.3V and no load)		14		mA
V_{DD}	Operating voltage	3.0	3.3	3.6	V
t_{ON}	Power-up time (first locked cycle after power-up)			5	mS
C_{IN}	Input Capacitance		5		pF
Z_{OUT}	Output Impedance		40		Ω

Note: 1. CLKIN pin is pulled low.

AC Electrical Characteristics for 3.3V Supply

Symbol	Parameter	Min	Typ	Max	Unit
CLKIN	Input frequency	20		130	MHz
ModOUT	Output frequency	20		130	MHz
t_{LH}*	Output rise time (measured from 0.8 to 2.0V)		1.5		nS
t_{HL} *	Output fall time (measured at 2.0V to 0.8V)		1.1		nS
t_{JC}	Jitter (Cycle-to-cycle)		±225		pS
t_D	Output duty cycle	45	50	55	%

Note: 1. *t_{LH} and t_{HL} are measured into a capacitive load of 15pF.

Deviation Charts

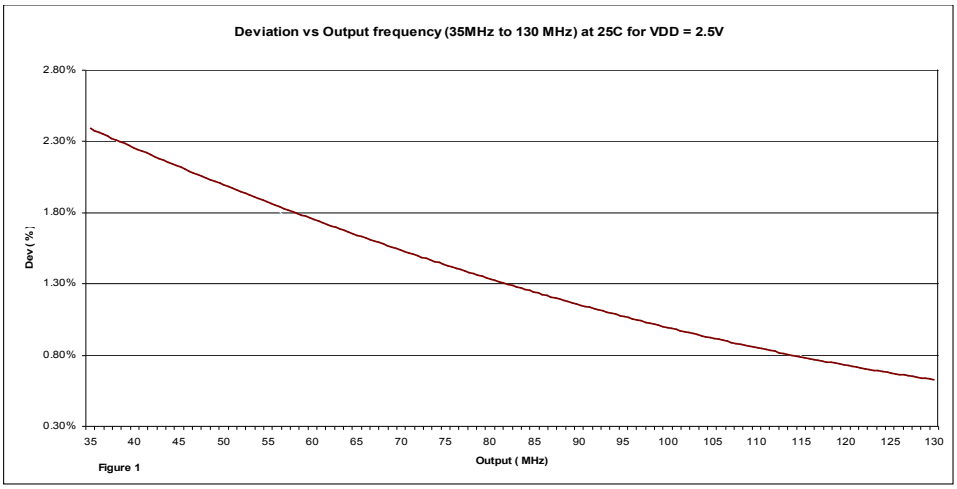

Figure 1

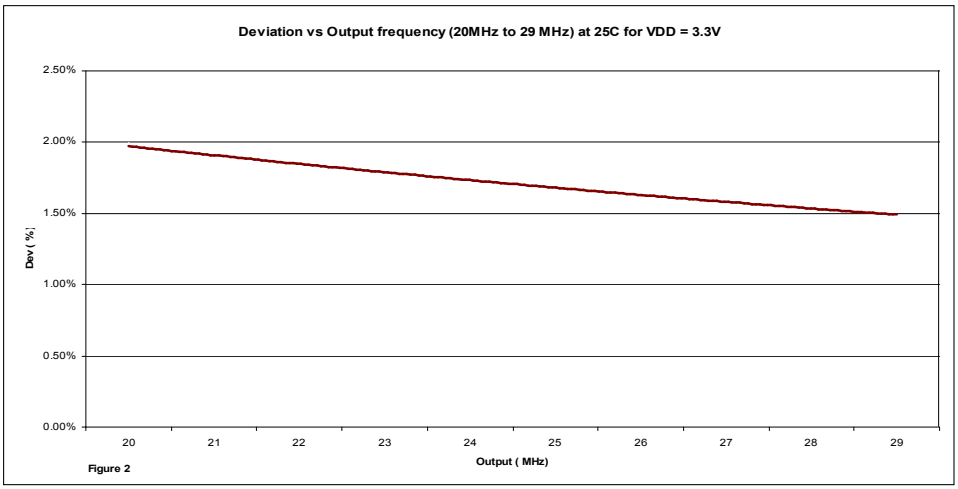

Figure 2

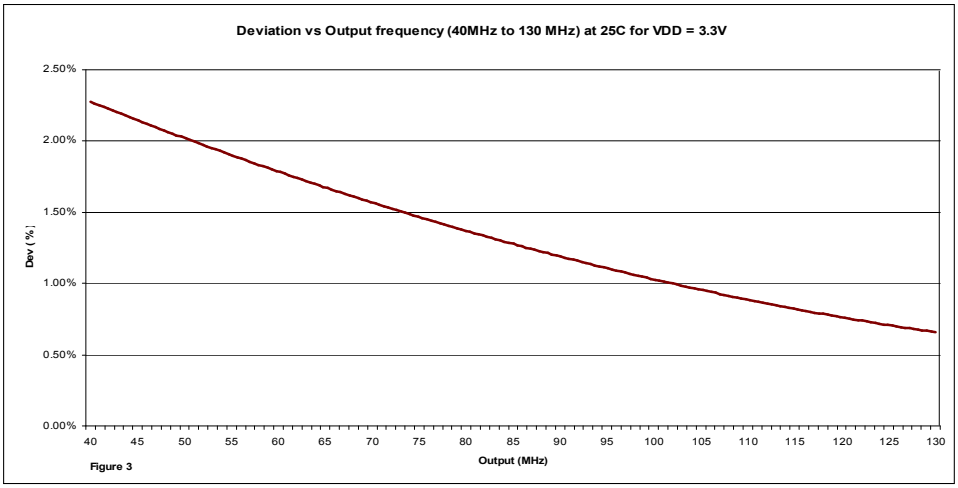

Figure 3

Note: Transition band is 30MHz to 34MHz for VDD=2.5V at 25ºC. Deviation in this band is 2.5% ± 4%.
Transition band is 30MHz to 39MHz for VDD=3.3V at 25ºC. Deviation in this band is 1.8% ± 30%.

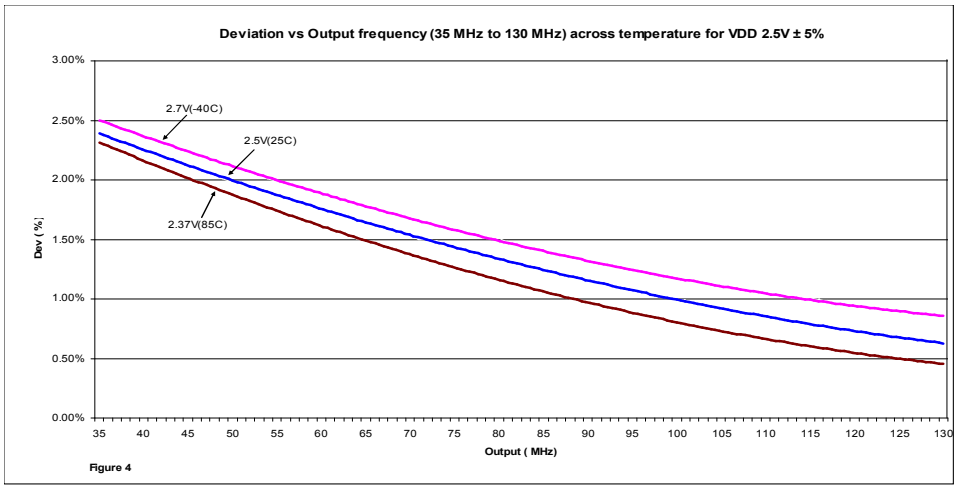

Figure 4

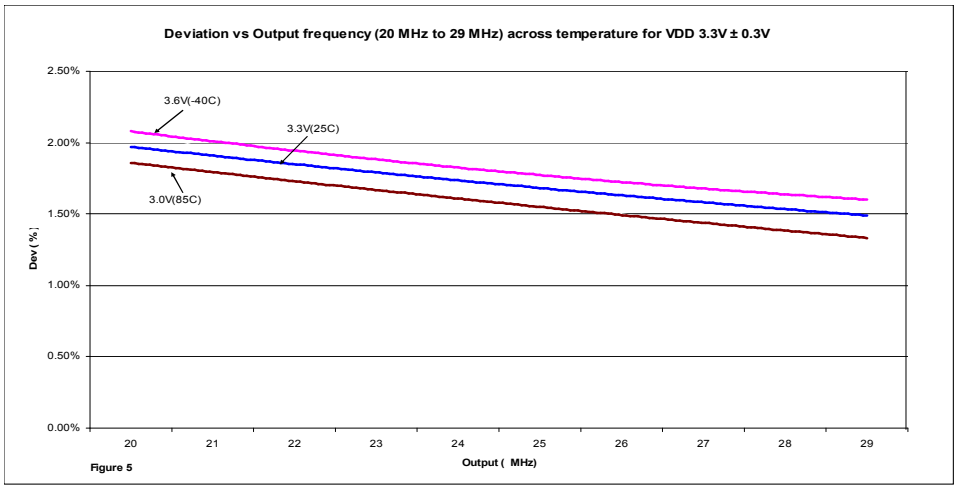

Figure 5

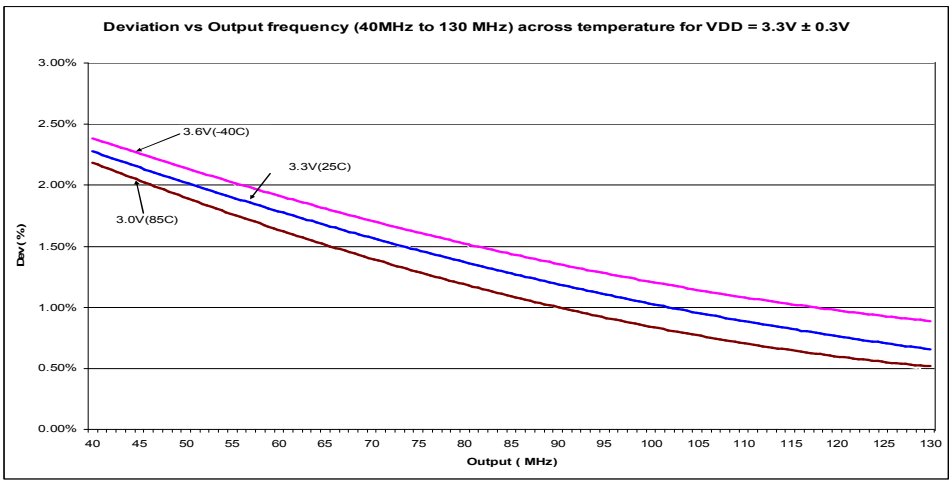

Note: Transition band is 30MHz to 34MHz for VDD=2.5V ± 5%, across -40ºC to +85C. Deviation in this band is 1.93% ± 37%.
Transition band is 30MHz to 39MHz for VDD=3.3V ± 0.3V, across -40ºC to +85C. Deviation in this band is 1.8% ± 45%.

Package Information **6L-TSOT23**

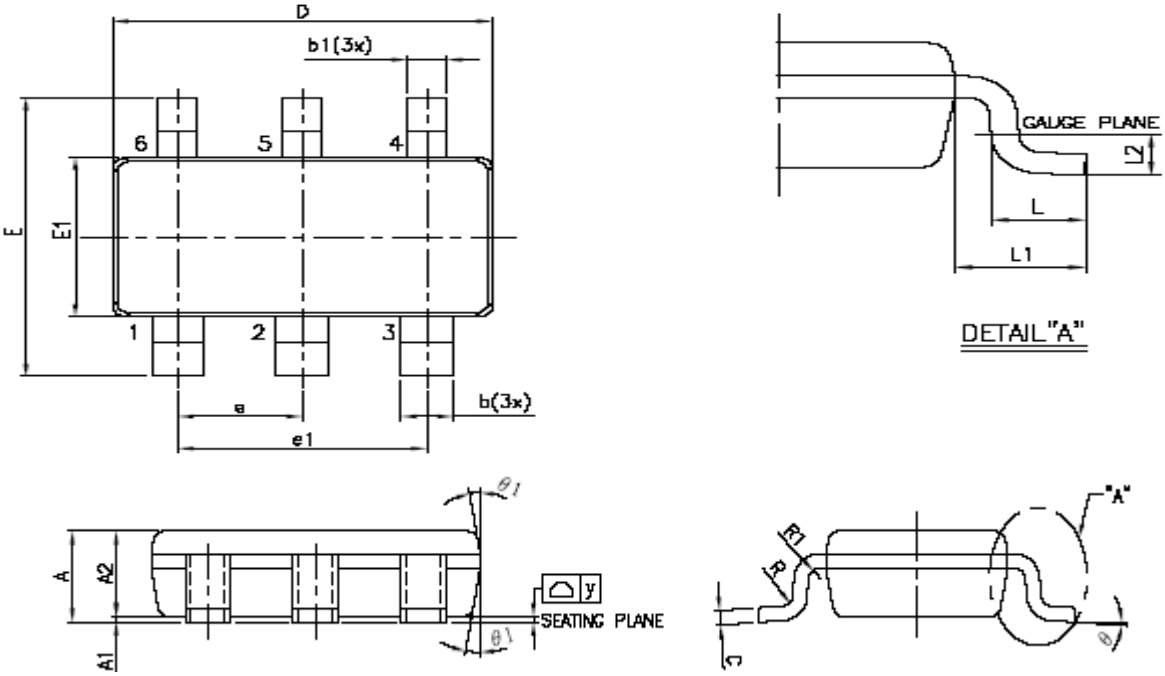

Symbol	Dimensions			
	Inches		Millimeters	
	Min	Max	Min	Max
A	0.0295	0.035	0.75	0.90
A1	0.00	0.0039	0.00	0.10
A2	0.0275	0.0314	0.70	0.80
b	0.0157	0.0197	0.40	0.50
b1	0.0118	0.0157	0.30	0.40
c	0.0031	0.0078	0.08	0.20
D	0.1141		2.90 REF	
E	0.1023	0.1181	2.60	3.00
E1	0.0590	0.0069	1.50	1.70
e	0.0374		0.95 BSC	
e1	0.0748		1.90 BSC	
L	0.0118	0.0236	0.30	0.60
L1	0.0236 REF		0.60 REF	
L2	0.0098 BSC		0.25 BSC	
R	0.0039	…..	0.10	…..
R1	0.0039	0.0098	0.10	0.25
θ	0°	8°	0°	8°
y	….	0.0039	….	0.10

Ordering Codes

Part Number	Marking	Package Type	Temperature
PCS3I7100AG-06JR	AA2	6L-TSOT23 (6L-TSOT26), TAPE & REEL, Green	-40℃ to +85℃

A “microdot” placed at the end of last row of marking or just below the last row toward the center of package indicates Pb-free.

PUBLICATION ORDERING INFORMATION

LITERATURE FULFILLMENT:
Literature Distribution Center for ON Semiconductor
P.O. Box 5163, Denver, Colorado 80217 USA
Phone: 303-675-2175 or 800-344-3860 Toll Free USA/Canada
Fax: 303-675-2176 or 800-344-3867 Toll Free USA/Canada
Email: orderlit@onsemi.com

N. American Technical Support: 800-282-9855 Toll Free USA/Canada
Europe, Middle East and Africa Technical Support:
Phone: 421 33 790 2910
Japan Customer Focus Center
Phone: 81-3-5773-3850

ON Semiconductor Website:
www.onsemi.com

Order Literature: http://www.onsemi.com/orderlit

For additional information, please contact your local Sales Representative