Test Procedure for the STK672-442BNGEVB Evaluation Board

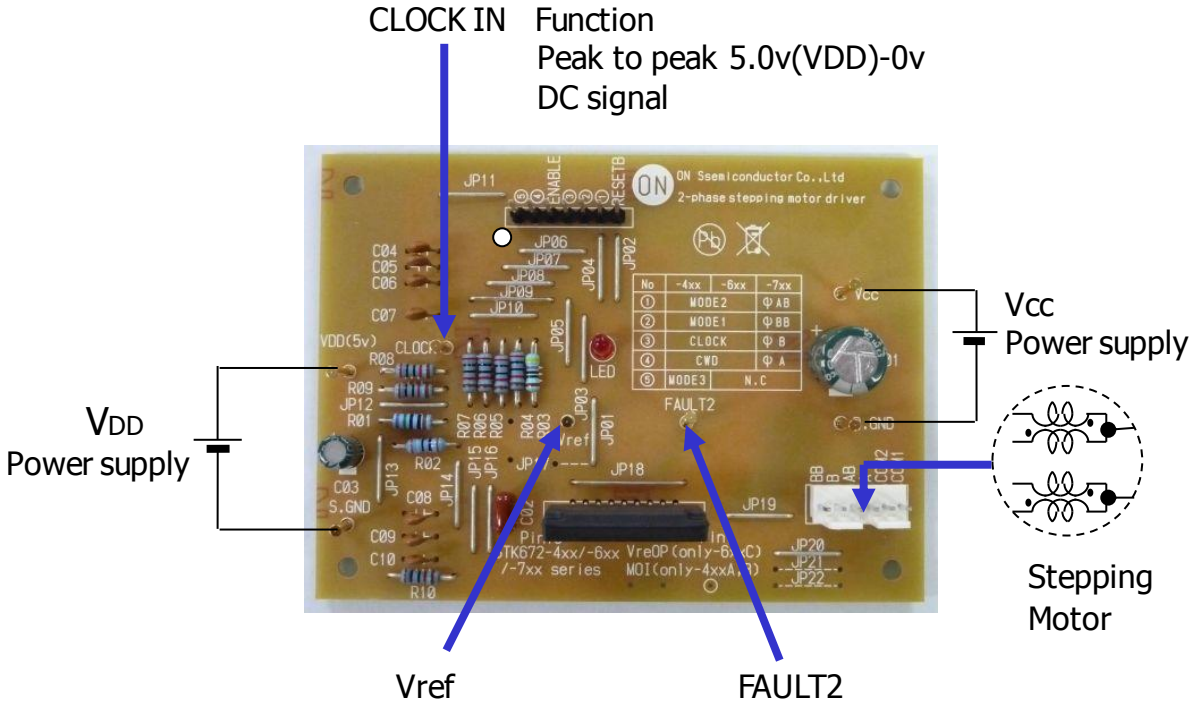

Figure 1: Test Setup

Evaluation Board Setup

[Supply Voltage] Vcc (10 to 46V) : Power Supply for stepper motor
VDD (5V) : Power Supply for internal logic IC

[Operation Guide]

1. Motor Connection:
   Connect the motor to OUT(A,AB,B,BB) and COM1,2.

2. Initial Condition Setting:
   Set to signal condition No.①,②,③,④,⑤,RESETB and Clock IN.
   *As for the evaluation board, the initial state is Hi all terminals.

3. Power Supply:
   At first, supply DC voltage to VDD (5.0V).
   Next, supply DC voltage to Vcc.

4. Set to ENABLE condition.
   When 'ENABLE' terminal becomes Hi, a motor operates.

[Setting the current limit using the Vref pin]

If the motor current is temporarily reduced, the circuit given below is recommended.
The variable voltage range of Vref input is 0.2 to 1.8V.

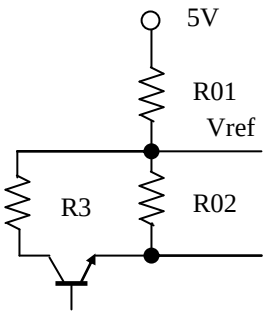

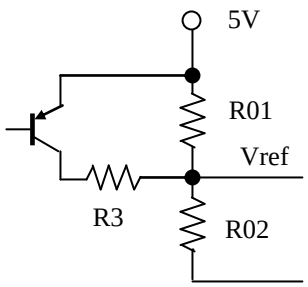

[Setting the motor current]
The motor current, I_{OH}, is set using the Pin 19 voltage, Vref, of the hybrid IC.
Equations related to I_{OH} and Vref are given below.

$$Vref \approx (RO2 \div (RO2+RO1)) \times V_{DD}(5V)$$
$$I_{OH} \approx (Vref \div 4.9) \div Rs$$

The value of 4.9 in Equation (2) above represents the Vref voltage as divided by a circuit inside the control IC.
Rs: 0.122Ω (Current detection resistor inside the hybrid IC)