THIS COPY IS PROVIDED ON A RESTRICTED BASIS AND IS NOT TO BE USED IN ANY WAY DETRIMENTAL TO THE INTERESTS OF PANDUIT CORP.

PANDUIT PART NUMBER	MILITARY PART NO. AND CLASS	STUD SIZE	DIMENSIONS in.				
			A ±.03	W ±.01	C ±.02	M ±.03	H ±.01
PNF14-4R-3K	MS25036-152 CLASS 2	#4	.78 (19.81)	.25 (6.35)	.18 (4.57)	.66 (16.76)	.12 (3.05)
PNF14-6R-3K	MS25036-107 CLASS 2	#6	.87 (22.10)	.31 (7.87)	.24 (6.10)	.71 (18.03)	.15 (3.81)
PNF14-6RN-3K	MS25036-106 CLASS 2	#6	.78 (19.81)	.25 (6.35)	.18 (4.57)	.63 (16.00)	.15 (3.81)
PNF14-8R-3K	MS25036-153 CLASS 2	#8	.87 (22.10)	.31 (7.87)	.25 (6.35)	.71 (18.03)	.17 (4.32)
PNF14-10R-3K	MS25036-108 CLASS 2	#10	.85 (21.59)	.31 (7.87)	.29 (7.37)	.71 (18.03)	.20 (5.08)
PNF14-14R-3K	MS25036-154 CLASS 2	1/4"	1.06 (26.92)	.46 (11.68)	.40 (10.16)	.85 (21.59)	.27 (6.86)

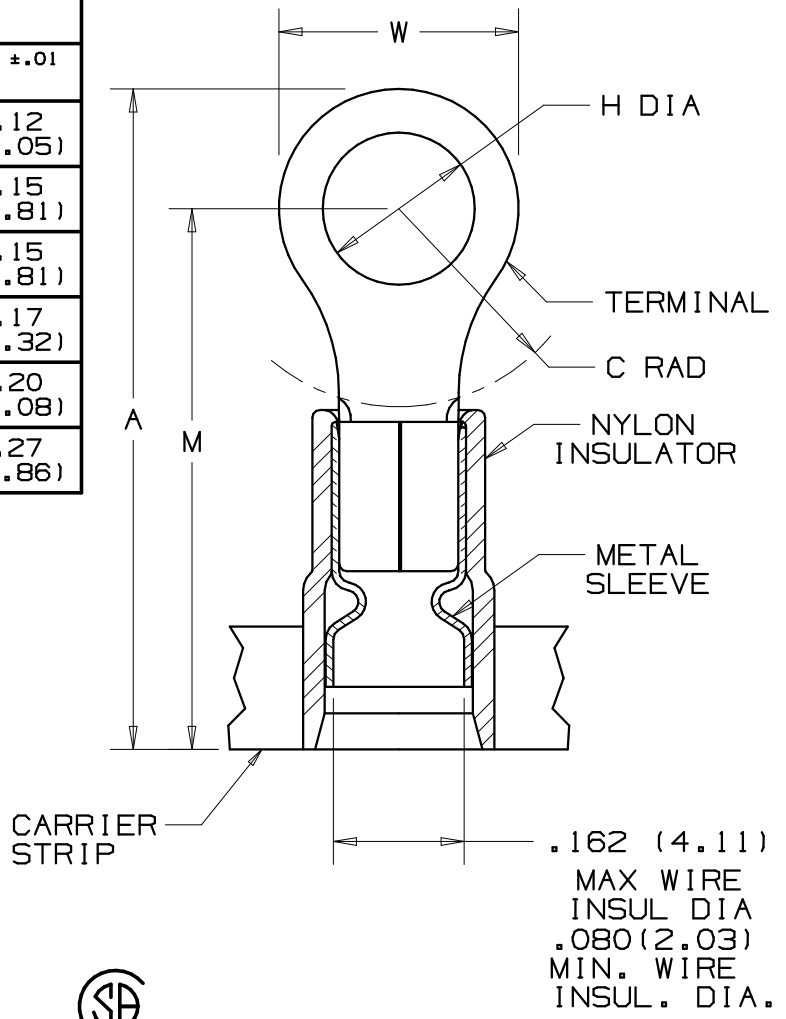

NOTES:

1) UL LISTED AND CSA CERTIFIED FOR:
   A. 600V. MAX. VOLTAGE RATING
   B. 221°F. (105°C) MAX. TEMP. RATING
   C. #16-14 (1.5-2.5mm² AWG SOLID OR STRANDED COPPER WIRE

2) MATERIAL:
   A. STAMPING- .03" (.8) THK. COPPER, TIN PLATED
   B. HOUSING- NYLON, BLUE
   C. SLEEVE- BRASS, TIN PLATED

3) WIRE STRIP LENGTH- 1/4" +1/32,-0 (6.4, +.8,-0)

4) PACKAGE QUANTITY: 3K = 3000 PCS.

5) DIMENSIONS IN PARENTHESIS ARE IN MILLIMETERS

6) INSTALLATION TOOLS:
   A. PRESSES - CP-851, CP-860, CP-861, CP-871
   B. APPLICATOR - CA-800, CA9
   C. DIE INSERTS - CD-800-2,CD9-2A,B

Panduit part numbers shown on this drawing meet the material requirements of RoHS (EUROPEAN DIRECTIVES 2002/95/EC) as proposed by the Technical Adaptation Committee

LISTED 587H E52164

CERTIFIED LR31212

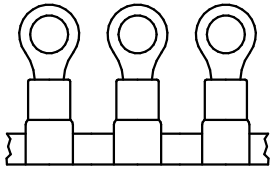

REV	DATE	BY	CHK	DESCRIPTION	ECN #	CUST	PM
07	8/06	DAW	DAW	ADDED MILITARY PART NO. & CLASS	TR00155	LCA	TRO
06	12/00	ED	SKB	FILESPEC WAS: N41144AA_PCD_05	08925	JAC	CCH
5	1/97	JAMB		ADDED DIM., "MIN. WIRE INSULATION DIA."	05409		
4	2/95	MS	RLS	ADDED WIRE STRIP LENGTH	02970	LA	KRS
3	2/95	MS	RS	UPDATED NOTES AND DIMENSIONS	02956	LA	KS

A41144_07

PANDUIT CORP. TINLEY PARK, ILLINOIS

TERMO 3PC. CONTINUOUSLY MOLDED NYLON (FUNNEL) INSULATED, 16-14 BARREL, RINGS

DRAWN BY	CHK'D	SCALE	DRAWING NO.
FES	FS	NONE	A41144