THIS INFORMATION IS CONFIDENTIAL AND PROPRIETARY TO LAIRD TECHNOLOGIES. IT MAY NOT BE DISCLOSED TO ANYONE, OTHER THAN LAIRD TECHNOLOGIES PERSONNEL, WITHOUT WRITTEN AUTHORIZATION FROM LAIRD TECHNOLOGIES.

* OP.1-250 FT. COILS

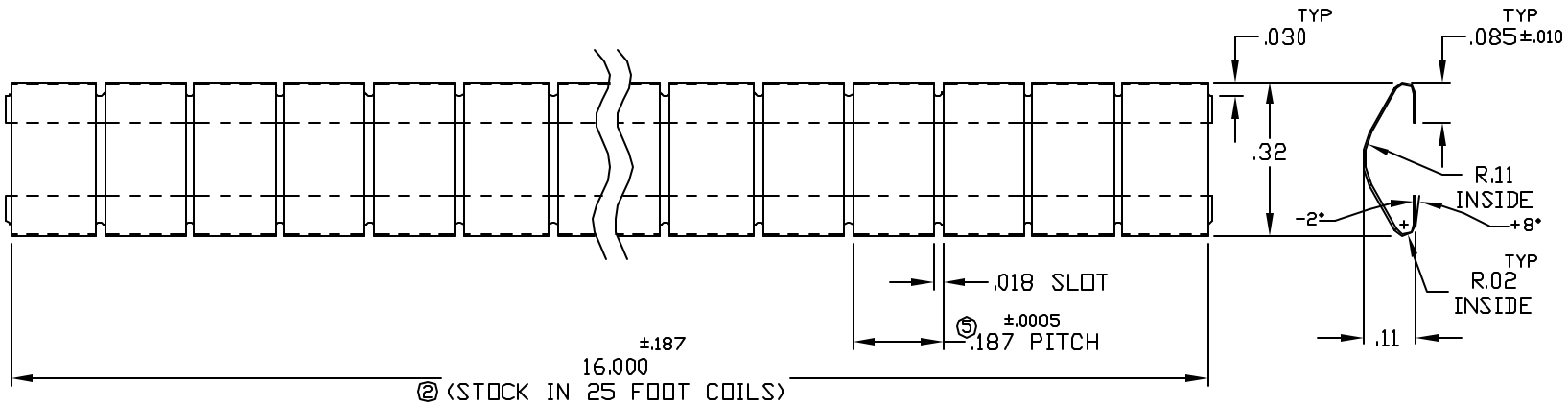

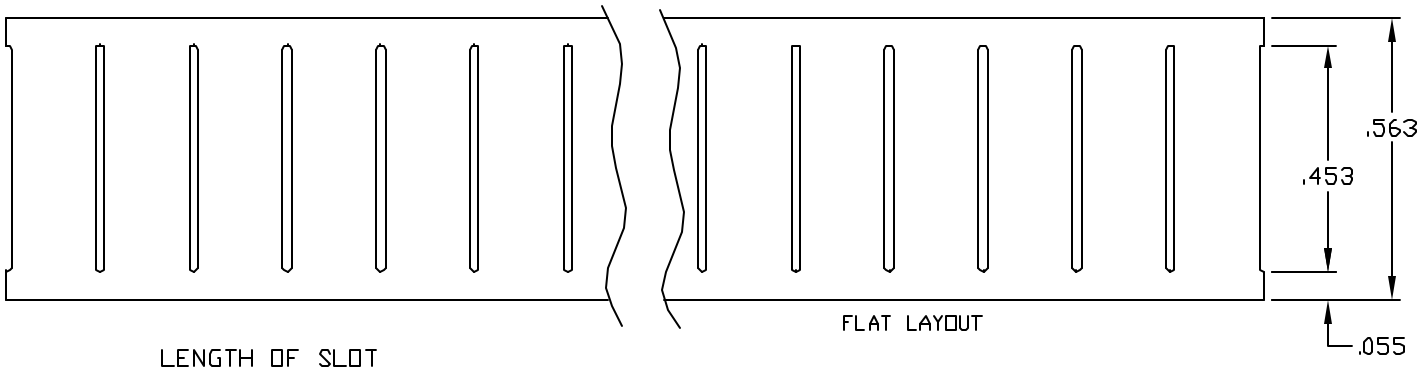

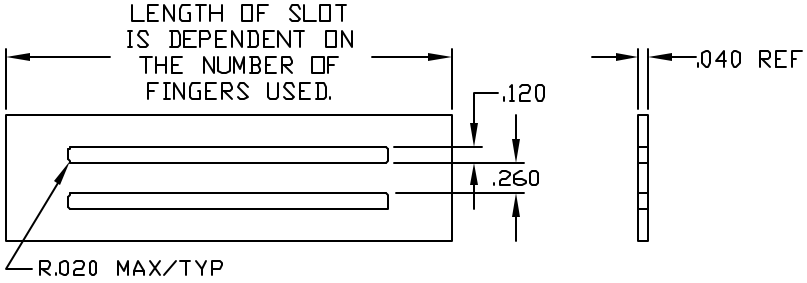

② NOT TO SCALE: RECOMMENDED MOUNTING HOLE PATTERN

DWG. NO.
0077-0010

ECN-5533 ADD STOCK 25 FT. COILS. ADD MOUNTING DIMS. P.N. WAS 0097-B-0926 RCC 9-27-90 ES 9-27-90	02
ECN-5949 DWG NO. WAS 9097-B-10 RCC 3-20-91 EWS 3-22-91	03
ECN-6542 ADD TO OP#1-250 FT. COILS. RCC 11-23-91	04
ECN-6909 .187+/-.0005 WAS .187+/-.001 PITCH. MN 3-3-92 ES 5-6-92	05
ECN-7821 RECOIL WAS PT.T 250' WAS 25'. MN 2-25-93 EWS 2-25-93	06
ECO-E2080 .563 WAS .655. DCS 6-8-98 EWS 6-11-93	07
ECO-E2039 ADDED +8°/-2° TOL. TO LEG FORM. RKM 12-7-00 EWS 12-7-00	08

B

MATERIAL:	.0035±.0002 X .564±.003 BeCu ALLOY 25 1/4 HARD ENDURANCE GRADE
HEAT TREATED:	TO DPH 373 MINIMUM USING A 500 GRAM LOAD
THICKNESS AFTER:	CLEANING AND BEFORE PLATING: .00315 MIN.
FINISH:	AS REQUIRED

TOLERANCES NOT SHOWN		
DECIMAL 2 PL'S	±	.020
DECIMAL 3 PL'S	±	.005
ANGULAR	±	---

THIRD ANGLE PROJECTION

UNITS: INCH [MM] SCALE: 4:1

CAD MAINTAINED DRAWING. MANUAL CHANGES UNAUTHORIZED.

Laird TECHNOLOGIES
DELAWARE WATER GAP PENNSYLVANIA

DRAWN BY:	RCC	DATE:	08/22/90
CHECKED BY:	ES	DATE:	08/23/90
APPROVED BY:	ES	DATE:	08/23/90

LAIRD STANDARD

REF. DWG NO. SLOT MOUNT GASKET

DWG. NO. 0077-0010 SUB 08