ULTRA PRECISION 8:1 MUX WITH INTERNAL TERMINATION AND 1:2 LVPECL FANOUT BUFFER

Precision Edge® SY58038U

FEATURES

- **Selects between 1 of 8 inputs, and provides 2 precision, low skew LVPECL output copies**
- **Guaranteed AC performance over temperature and voltage:**
  - **DC to 4.5Gbps throughput**
  - **<500ps propagation delay IN-to-Q ($V_{IN} \geq 100mV$)**
  - **<100ps t_r / t_f time**
  - **<15ps skew (output-to-output)**
- **Unique, patent-pending, channel-to-channel isolation design provides superior crosstalk performance**
- **Ultra-low jitter design:**
  - **<1ps$_{RMS}$ random jitter**
  - **<10ps$_{PP}$ deterministic jitter**
  - **<10ps$_{PP}$ total jitter (clock)**
  - **<1ps$_{RMS}$ cycle-to-cycle jitter**
  - **<0.7ps$_{RMS}$ crosstalk-induced jitter**
- **Unique, patent-pending, input termination and VT pin accepts DC- and AC-coupled inputs (CML, PECL, LVDS)**
- **800mV LVPECL output swing**
- **Power supply 2.5V ±5% or 3.3V ±10%**
- **–40°C to +85°C temperature range**
- **Available in 44-pin (7mm × 7mm) MLF™ package**

APPLICATIONS

- **Data communication systems**
- **All SONET/SDH data/clock applications**
- **All Fibre Channel applications**
- **All Gigabit Ethernet applications**

Precision Edge®

DESCRIPTION

The SY58038U is a low jitter, low skew, high-speed 8:1 multiplexer with a 1:2 differential fanout buffer optimized for precision telecom and enterprise server distribution applications. The SY58038U distributes clock frequencies from DC to 3.5GHz, and data rates to 4.5Gpbs guaranteed over temperature and voltage.

The SY58038U differential input includes Micrel's unique, 3-pin input termination architecture that directly interfaces to any differential signal (AC- or DC-coupled) as small as 100mV without any level shifting or termination resistor networks in the signal path. The outputs are 800mV, 100K compatible LVPECL with extremely fast rise/fall times guaranteed to be less than 100ps.

The SY58038U features a patent-pending isolation design that significantly improves channel-to-channel crosstalk performance.

The SY58038U operates from a 2.5V ±5% or 3.3V ±10% supply and is guaranteed over the full industrial temperature range of –40°C to +85°C. The SY58038U is part of Micrel's high-speed, Precision Edge® product line.

Data sheets and support documentation can be found on Micrel's web site at www.micrel.com.

Precision Edge is a registered trademark of Micrel, Inc.
MLF and *Micro*LeadFrame are trademarks of Amkor Technology, Inc.

FUNCTIONAL BLOCK DIAGRAM

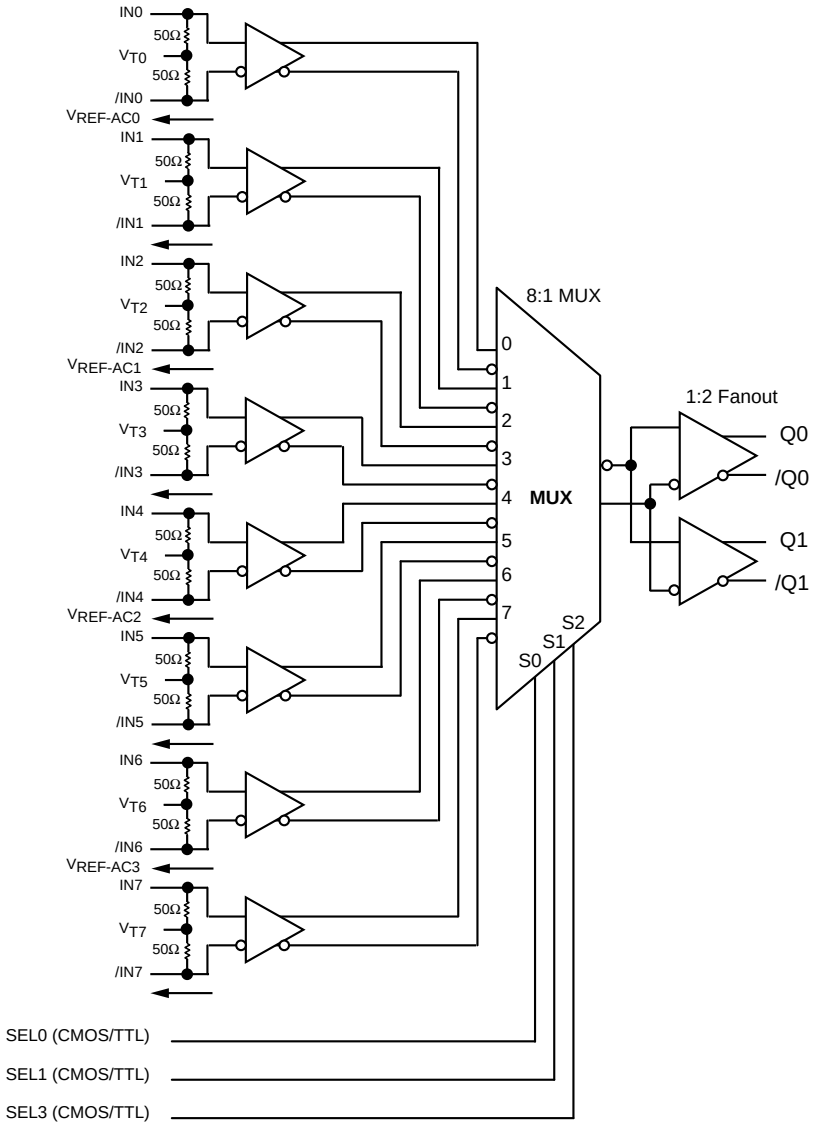

TRUTH TABLE

SEL2	SEL1	SEL0	Q	/Q
L	L	L	IN0	/IN0
L	L	H	IN1	/IN1
L	H	L	IN2	/IN2
L	H	H	IN3	/IN3
H	L	L	IN4	/IN4
H	L	H	IN5	/IN5
H	H	L	IN6	/IN6
H	H	H	IN7	/IN7

PACKAGE/ORDERING INFORMATION

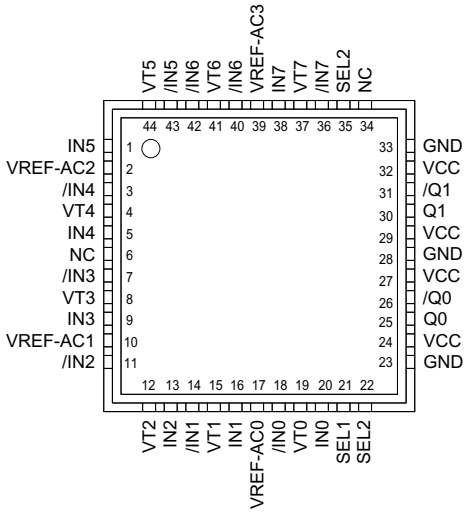

44-Pin MLF™ (MLF-44)

Ordering Information[1]

Part Number	Package Type	Operating Range	Package Marking	Lead Finish
SY58038UMI	MLF-44	Industrial	SY58038U	Sn-Pb
SY58038UMITR[2]	MLF-44	Industrial	SY58038U	Sn-Pb
SY58038UMG	MLF-44	Industrial	SY58038U with Pb-Free bar-line indicator	Pb-Free NiPdAu
SY58038UMGTR[2]	MLF-44	Industrial	SY58038U with Pb-Free bar-line indicator	Pb-Free NiPdAu

Notes:

1. Contact factory for die availability. Dice are guaranteed at T_A = 25°C, DC electricals only.
2. Tape and Reel.

PIN DESCRIPTION

Pin Number	Pin Name	Pin Function
20, 18, 16, 14, 13, 11, 9, 7, 5, 3, 1, 43, 42, 40, 38, 36	IN0, /IN0, IN1, /IN1, IN2, /IN2, IN3, /IN3, IN4, /IN4, IN5,/IN5, IN6, /IN6, IN7, /IN7	Differential Inputs: These input pairs are the differential signal inputs to the device. Inputs accept AC or DC-coupled signals as small as 100mV. Each pin of a pair internally terminates to a VT pin through 50Ω. Note that these inputs will default to an indeterminate state if left open. Please refer to the “Input Interface Applications” section for more details.
19,15, 12, 8, 4, 44, 41, 37	VT0, VT1 VT2, VT3, VT4, VT5, VT6, VT7	Input Termination Center-Tap: Each side of the differential input pair terminates to a VT pin. The VT pins provide a center-tap to a termination network for maximum interface flexibility. See “Input Interface Applications” section for more details. For a CML or LVDS inputs, the VT pin is left floating.
17, 10, 2 39	VREF-AC0, VREF-AC1, VREF-AC2, VREF-AC3	Reference Voltage: This output biases to V_{CC}–1.2V. It is used when AC coupling the inputs (IN, /IN). For AC-coupled applications, connect VREF_AC to the VT pin and bypass with a 0.01µF low ESR capacitor to V_{CC}. See “Input Interface Applications” section for more details.
21, 22, 35	SEL0, SEL1, SEL2	The single-ended TTL/CMOS-compatible inputs select the inputs to the multiplexer. Note that this input is internally connected to a 25kΩ pull-up resistor and will default to a logic HIGH state if left open.
24, 27, 29, 32	VCC	Positive Power Supply. Bypass with 0.1µF||0.01µF low ESR capacitors as close to each VCC pin.
25, 26, 30, 31	Q0,/Q0, Q1,/Q1	Differential Outputs: These LVPECL output pairs are the outputs of the device. Unused output pairs may be left open. Each output is designed to drive 800mV into 50Ω terminated to V_{CC}–2V. (or V_{CC}–1.2V if AC-coupled).
23, 28, 33	GND, Exposed Pad	Ground. GND and exposed pad must both be connected to the most negative potential of chip ground.

Absolute Maximum Ratings[1]

Power Supply Voltage (V_{CC}) ..... –0.5V to +4.0V
Input Voltage (V_{IN}) ..... –0.5V to V_{CC}
LVPECL Output Current (I_{OUT})
  Continuous 50mA
  Surge 100mA
Termination Current[3]
  Source or sink current on VT pin ..... ±100mA
Lead Temperature (soldering, 20 sec.) ..... 260°C
Storage Temperature Range (T_S) ..... –65°C to +150°C

Operating Ratings[2]

Power Supply Voltage (V_{CC}) ..... +2.375V to +2.625V
  ..... +3.0V to +3.6V
Ambient Temperature Range (T_A) ..... –40°C to +85°C
Package Thermal Resistance[4]
  MLF™ (θ_{JA})
    Still-Air ..... 24°C/W
  MLF™ (ψ_{JB})
    Junction-to-board ..... 12°C/W

DC ELECTRICAL CHARACTERISTICS[5]

T_A = –40°C to +85°C, unless otherwise stated.

Symbol	Parameter	Condition	Min	Typ	Max	Units
V_{CC}	Power Supply Voltage	V_{CC} = 2.5V.	2.375	2.5	2.625	V
		V_{CC} = 3.3V.	3.0	3.3	3.6	V
I_{CC}	Power Supply Current	No load, max. V_{CC}.		120	170	mA
R_{IN}	Input Resistance (IN-to-V_T)		40	50	60	Ω
R_{DIFF_IN}	Differential Input Resistance (IN-to-/IN)		80	100	120	Ω
V_{IH}	Input HIGH Voltage (IN-to-/IN)	**Note 6**	V_{CC}–1.6		V_{CC}	V
V_{IL}	Input LOW Voltage (IN-to-/IN)		0		V_{IH}–0.1	V
V_{IN}	Input Voltage Swing (IN-to-/IN)	See Figure 1a.	0.1		1.7	V
V_{DIFF_IN}	Differential Input Voltage Swing (IN-to-/IN)	See Figure 1b.	0.2			V
V_{T_IN}	IN-to-V_T (IN-to-/IN)				1.28	V
V_{REF-AC}	Output Reference Voltage		V_{CC}–1.3	V_{CC}–1.2	V_{CC}–1.1	V

Notes:

1. Permanent device damage may occur if ratings in the “Absolute Maximum Ratings” section are exceeded. This is a stress rating only and functional operation is not implied for conditions other than those detailed in the operational sections of this data sheet. Exposure to absolute maximum ratings conditions for extended periods may affect device reliability.
2. The data sheet limits are not guaranteed if the device is operated beyond the operating ratings.
3. Due to the limited drive capability, use for input of the same package only.
4. Package thermal resistance assumes exposed pad is soldered (or equivalent) to the device’s most negative potential on the PCB. Ψ_{JB} uses 4-layer θ_{JA} in still-air number unless otherwise stated.
5. The circuit is designed to meet the DC specifications shown in the above table after thermal equilibrium has been established.
6. V_{IH} (min), not lower than 1.2V.

LVPECL OUTPUT DC ELECTRICAL CHARACTERISTICS[7]

V_{CC} = 2.5V ±5% or 3.3V ±10%; T_A= –40°C to +85°C; R_L = 50Ω to V_{CC}–2V, unless otherwise stated.

Symbol	Parameter	Condition	Min	Typ	Max	Units
V_{OH}	Output HIGH Voltage Q, /Q		V_{CC}–1.145		V_{CC}–0.895	V
V_{OL}	Output LOW Voltage Q, /Q		V_{CC}–1.945		V_{CC}–1.695	V
V_{OUT}	Output Differential Swing Q, /Q	See Figure 1a.	550	800		mV
V_{DIFF_OUT}	Differential Output Voltage Swing Q, /Q	See Figure 1b.	1100	1600		mV

LVTTL/CMOS DC ELECTRICAL CHARACTERISTICS[7]

V_{CC} = 2.5V ±5% or 3.3V ±10%; T_A= –40°C to +85°C, unless otherwise stated.

Symbol	Parameter	Condition	Min	Typ	Max	Units
V_{IH}	Input HIGH Voltage		2.0		V_{CC}	V
V_{IL}	Input LOW Voltage				0.8	V
I_{IH}	Input HIGH Current		–125		30	µA
I_{IL}	Input LOW Current		–300			µA

Note:

7. The circuit is designed to meet the DC specifications shown in the above table after thermal equilibrium has been established.

AC ELECTRICAL CHARACTERISTICS[8]

V_{CC} = 2.5V ±5% or 3.3V ±10%; T_A= –40°C to +85°C, R_L = 50Ω to V_{CC}–2V, unless otherwise stated.

Symbol	Parameter	Condition	Min	Typ	Max	Units
f_{MAX}	Maximum Operating Frequency	NRZ data	4.5			Gbps
		$V_{OUT} \geq$ 400mV Clock	3.5	5		GHz
t_{pd}	Differential Propagation Delay (IN-to-Q)	$V_{IN} \geq$ 100mV	280	390	500	ps
	(SEL-to-Q)		150		600	ps
Δt_{pd} Tempco	Differential Propagation Delay Temperature Coefficient			220		fs/°C
t_{SKEW}	Output-to-Output Skew	**Note 9**			15	ps
	Part-to-Part Skew	**Note 10**			150	ps
t_{JITTER}	Data Random Jitter (RJ)	**Note 11**			1	ps_{RMS}
	Deterministic Jitter (DJ)	**Note 12**			10	ps_{RMS}
	Clock Cycle-to-Cycle Jitter Total Jitter (TJ)	**Note 13** **Note 14**			1 10	ps_{PP} ps_{RMS}
	Crosstalk-induced Jitter	**Note 15**			0.7	ps_{RMS}
t_r, t_f	Output Rise/Fall Time	At full output swing, 20% to 80%.	35	65	100	ps

Notes:

8. High-frequency AC-parameters are guaranteed by design and characterization.
9. Output-to-output skew is measured between two different outputs under identical input transitions.
10. Part-to-part skew is defined for two parts with identical power supply voltages at the same temperature and with no skew of the edges at the respective inputs.
11. Random jitter is measured with a K28.7 character pattern, measured at <f_{MAX}.
12. Deterministic jitter is measured at 2.5Gbps/3.2Gbps, with both K28.5 and 2^{23}–1 PRBS pattern.
13. Cycle-to-cycle jitter definition: the variation of periods between adjacent cycles, $T_n – T_{n–1}$ where T is the time between rising edges of the output signal.
14. Total jitter definition: with an ideal clock input of frequency <f_{MAX}, no more than one output edge in 10^{12} output edges will deviate by more than the specified peak-to-peak jitter value.
15. Crosstalk is measured at the output while applying two similar differential clock frequencies that are asynchronous with respect to each other at the inputs.

SINGLE-ENDED AND DIFFERENTIAL SWINGS

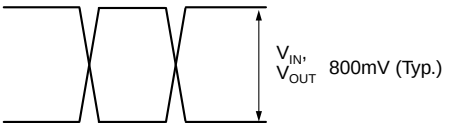

Figure 1a. Single-Ended Voltage Swing

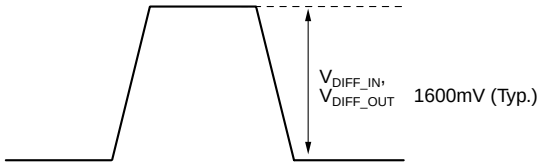

Figure 1b. Differential Voltage Swing

TYPICAL OPERATING CHARACTERISTICS

V_{CC} = 3.3V, GND = 0, V_{IN} = 100mV, T_A = 25°C, unless otherwise stated.

Output Amplitude vs. Frequency

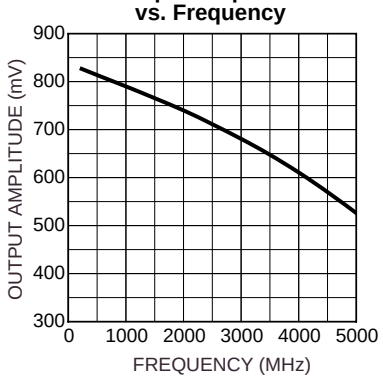

Within Device Skew vs. Temperature

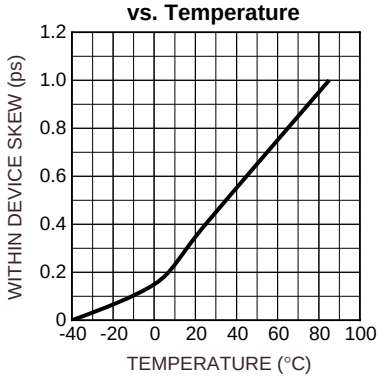

Propagation Delay vs. Temperature

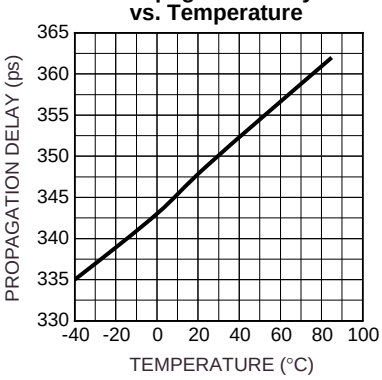

FUNCTIONAL CHARACTERISTICS

V_{CC} = 3.3V, GND = 0, V_{IN} = 100mV, T_A = 25°C, unless otherwise stated.

1.25Gbps Output (Q – /Q)

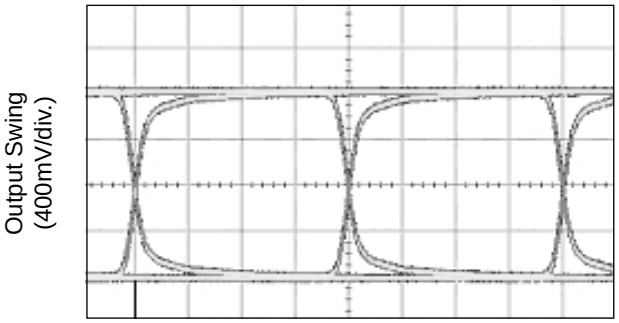

2.5Gbps Output (Q – /Q)

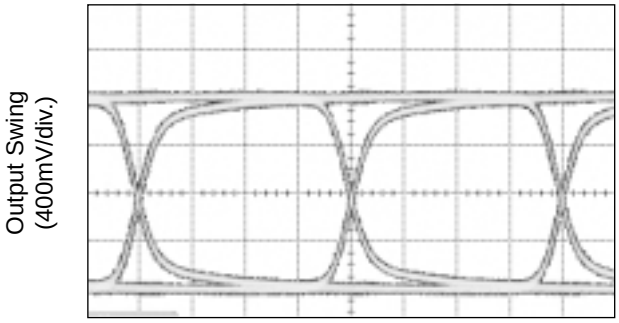

3.2Gbps Output (Q – /Q)

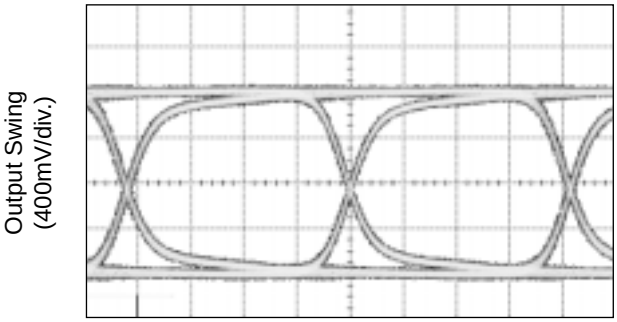

200MHz Output (Q – /Q)

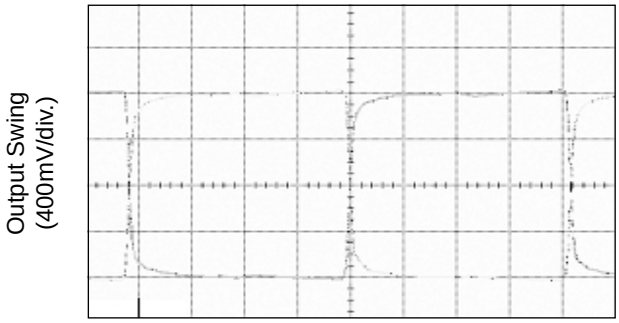

1.25GHz Output (Q – /Q)

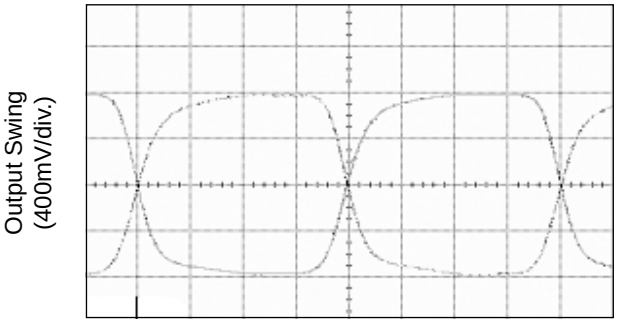

2.5GHz Output (Q – /Q)

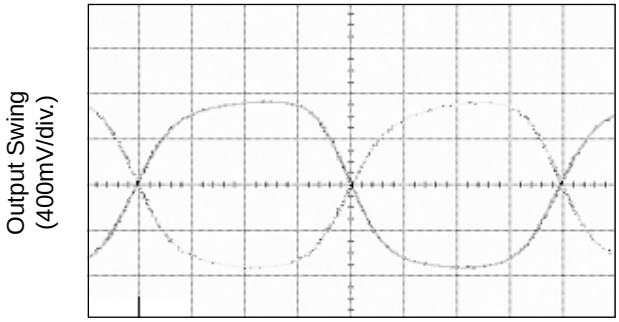

5GHz Output (Q – /Q)

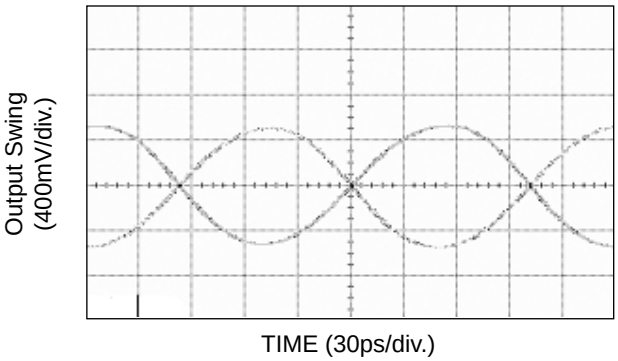

INPUT AND OUTPUT STAGES

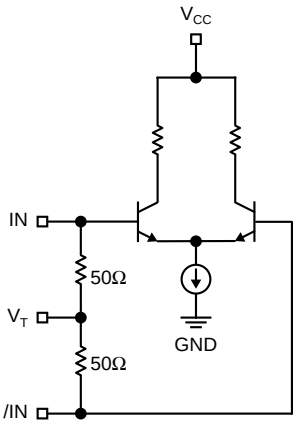

Figure 2a. Simplified Differential Input Stage

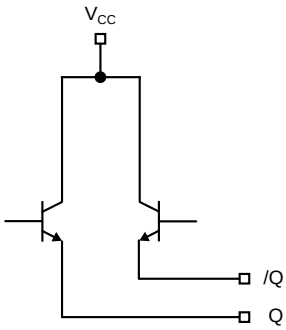

Figure 2b. Simplified LVPECL Output Stage

INPUT INTERFACE APPLICATIONS

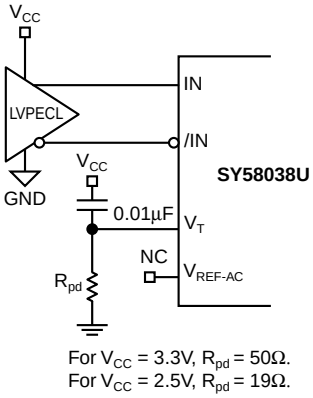

Figure 3a. LVPECL Interface (DC-Coupled)

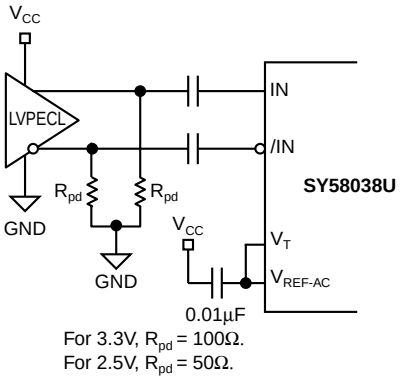

Figure 3b. LVPECL Interface (AC-Coupled)

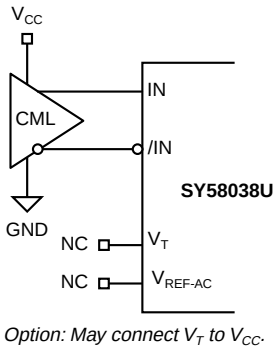

Figure 3c. CML Interface (DC-Coupled)

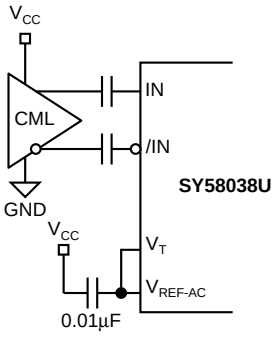

Figure 3d. CML Interface (AC-Coupled)

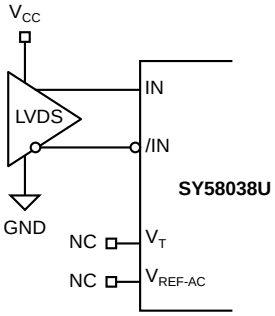

Figure 3e. LVDS Interface

OUTPUT INTERFACE APPLICATIONS

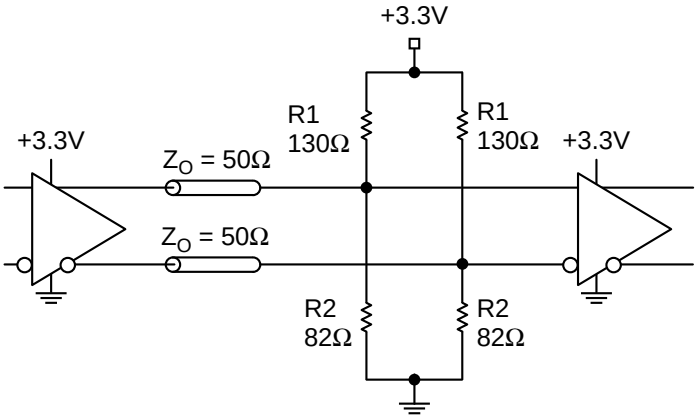

Figure 4a. Parallel Thevenin-Equivalent Termination

Note:
For +2.5V system, R1 = 250Ω, R2 = 62.5Ω.

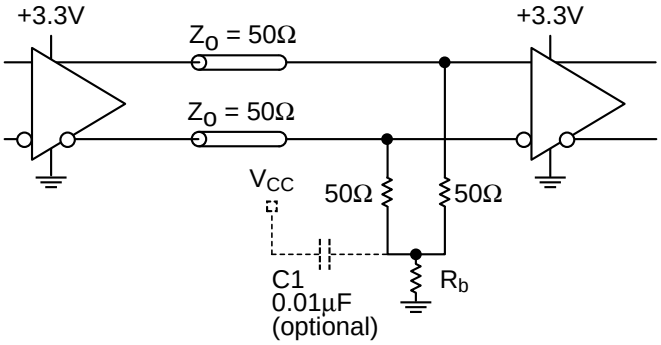

Figure 4b. Parallel Termination (3-Resistor)

Note:
For +2.5V system, R_b =19Ω.
For +3.3V system, R_b = 50Ω.

RELATED MICREL PRODUCTS AND SUPPORT DOCUMENTATION

Part Number	Function	Data Sheet Link
SY58037U	Ultra Precision 8:1 MUX with Internal Termination and 1:2 CML Fanout Buffer	http://www.micrel.com/product-info/products/sy58037u.shtml
SY58038U	Ultra Precision 8:1 MUX with Internal Termination and 1:2 LVPECL Fanout Buffer	http://www.micrel.com/product-info/products/sy58038u.shtml
SY58039U	Ultra Precision 8:1 MUX with Internal Termination and 1:2 400mV LVPECL Fanout Buffer	http://www.micrel.com/product-info/products/sy58039u.shtml
	MLF™ Application Note	www.amkor.com/products/notes_papers/MLF_AppNote_0902.pdf
HBW Solutions	New Products and Applications	www.micrel.com/product-info/products/solutions.shtml

44 LEAD *Micro*LeadFrame™ (MLF-44)

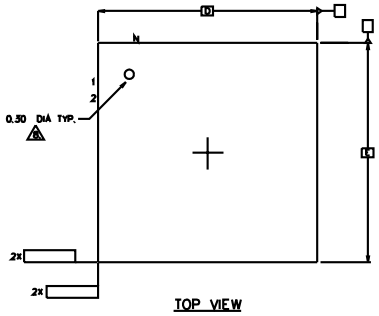

TOP VIEW

NOTES :

1. DIMENSIONING AND TOLERANCING CONFORM TO ASME Y14.5M. - 1994.
2. ALL DIMENSIONS ARE IN MILLIMETERS, θ IS IN DEGREES.
3. N IS THE TOTAL NUMBER OF TERMINALS.
4. DIMENSION b APPLIES TO METALLIZED TERMINAL AND IS MEASURED BETWEEN 0.15 AND 0.30mm FROM TERMINAL TIP. IF THE TERMINAL HAS THE OPTIONAL RADIUS ON THE OTHER END OF THE TERMINAL, THE DIMENSION b SHOULD NOT BE MEASURED IN THAT RADIUS AREA.
5. ND AND NE REFER TO THE NUMBER OF TERMINALS ON EACH D AND E SIDE RESPECTIVELY.
6. MAX. PACKAGE WARPAGE IS 0.05 mm.
7. MAXIMUM ALLOWABLE BURRS IS 0.076 mm IN ALL DIRECTIONS.
8. PIN #1 ID ON TOP WILL BE LASER MARKED.
9. BILATERAL COPLANARITY ZONE APPLIES TO THE EXPOSED HEAT SINK SLUG AS WELL AS THE TERMINALS.
10. THIS DRAWING CONFORMES TO JEDEC REGISTERED OUTLINE MO-220

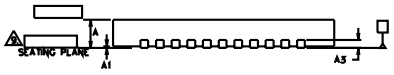

SIDE VIEW

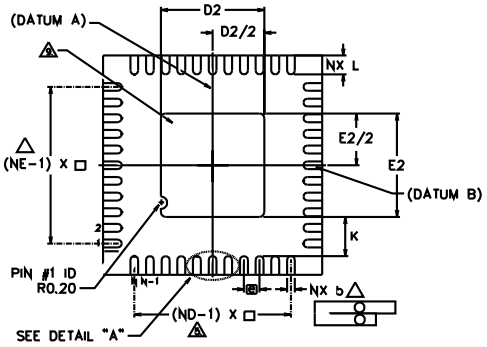

BOTTOM VIEW

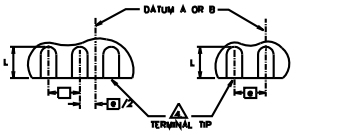

EVEN TERMINAL/SIDE ODD TERMINAL/SIDE

DETAIL "A"

SYMBOL	DIMENSIONS MIN.	NOM.	MAX.	NOTE
e		0.50 BSC		
N		44		3
ND		11		5
NE		11		
L	0.55	0.60	0.65	
b	0.18	0.25	0.30	4
D2	3.20	3.30	3.40	
E2	3.20	3.30	3.40	
D		7.00 BSC		
E		7.00 BSC		
A	0.80	0.85	1.00	
A1	0.00	0.02	0.05	
K		0.20 MIN.		
θ	0	—	12	2

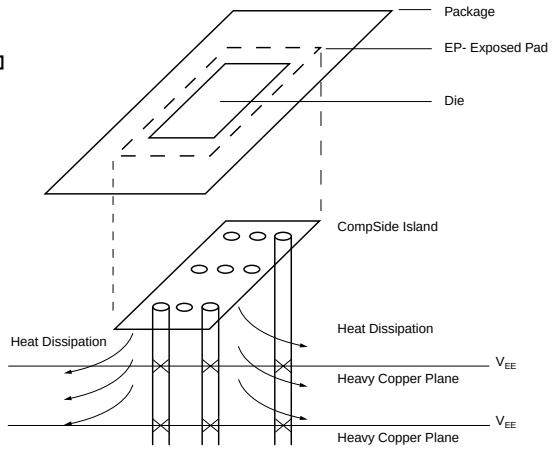

PCB Thermal Consideration for 44-Pin MLF™ Package
(Always solder, or equivalent, the exposed pad to the PCB)

Package Notes:

1. Package meets Level 2 qualification.
2. All parts are dry-packaged before shipment.
3. Exposed pads must be soldered to a ground for proper thermal management.

MICREL, INC. 2180 FORTUNE DRIVE SAN JOSE, CA 95131 USA

TEL + 1 (408) 944-0800 FAX + 1 (408) 474-1000 WEB http://www.micrel.com

The information furnished by Micrel in this data sheet is believed to be accurate and reliable. However, no responsibility is assumed by Micrel for its use. Micrel reserves the right to change circuitry and specifications at any time without notification to the customer.

Micrel Products are not designed or authorized for use as components in life support appliances, devices or systems where malfunction of a product can reasonably be expected to result in personal injury. Life support devices or systems are devices or systems that (a) are intended for surgical implant into the body or (b) support or sustain life, and whose failure to perform can be reasonably expected to result in a significant injury to the user. A Purchaser's use or sale of Micrel Products for use in life support appliances, devices or systems is at Purchaser's own risk and Purchaser agrees to fully indemnify Micrel for any damages resulting from such use or sale.

© 2005 Micrel, Incorporated.