B-138XEH REV. L

REVISIONS			RELEASED
REV.	DESCRIPTION	DATE	APPROVED
E	22814 ITEM 3 WAS -001	2-18-93	WS
F	23843 ADDED ITEM 13	8/9/93	WS
K	06-000057 CHANGED ITEM 7 VIEW TO PHILLIPS	05/12/19	CB
L	11-024834 ITEM 6 WAS -054	11/12/01	CB

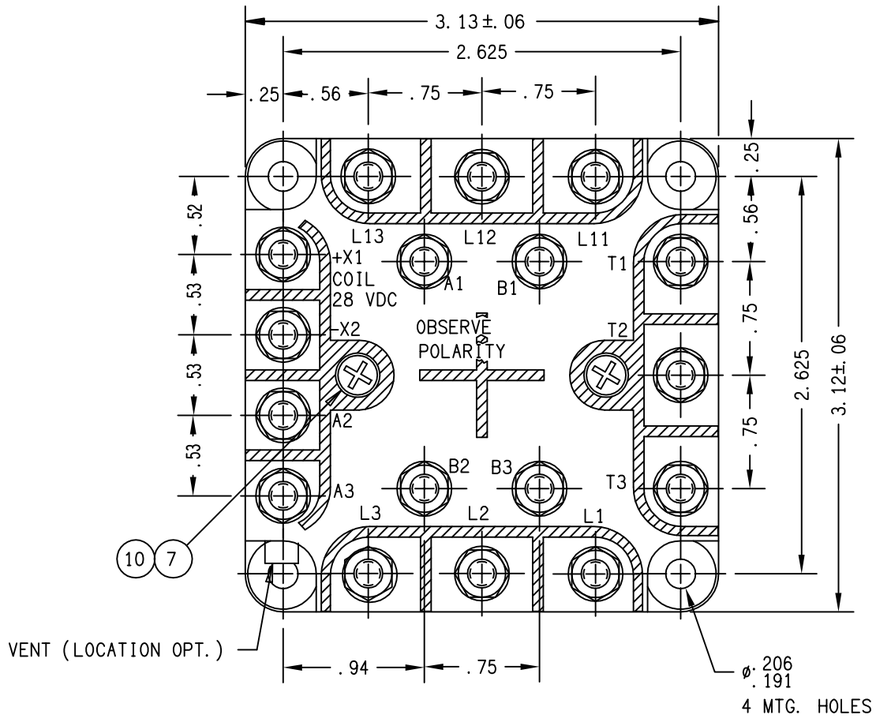

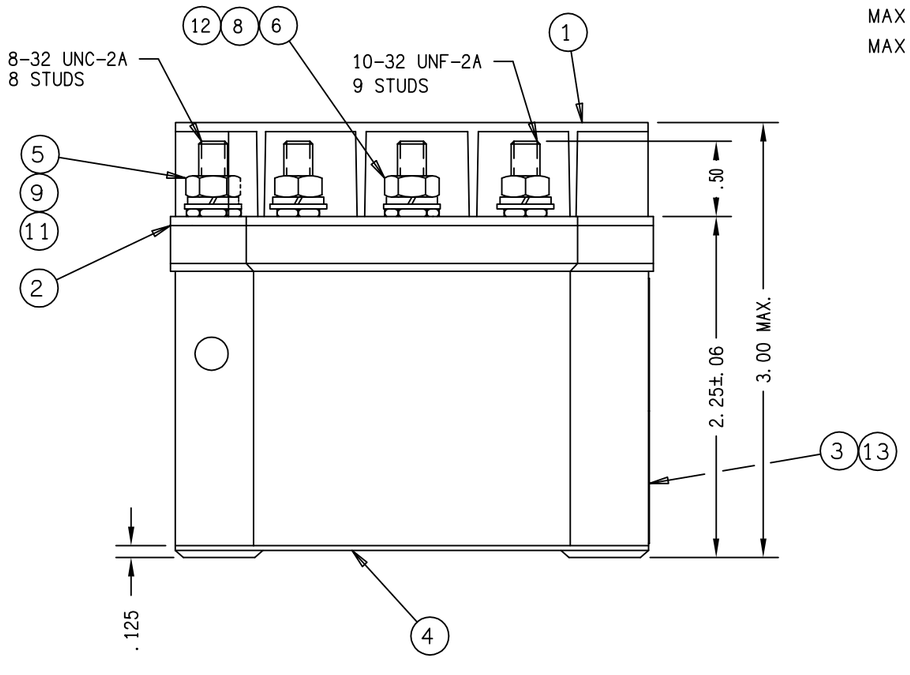

NOMINAL OPERATING VOLTAGE	
COIL	28 VDC
CONTACTS	115/200 VAC 400 HZ
PICKUP VOLTAGE	18 V MAX AT 85°C
DROPOUT VOLTAGE	7.0 TO 1.5 VDC
CONTACT ARRANGEMENT	TPDT NC
CONTACT RATING	
RESISTIVE	60 AMP AC
INDUCTIVE	35 AMP AC
LAMP	10 AMP AC
MOTOR	15 AMP AC
CAPACTIVE	60 AMP AC
AUX. CONTACT RATING AT 28 VDC & 115 VAC. 400 HZ	
RESISTIVE	5 AMP
INDUCTIVE	3 AMP
MOTOR	3 AMP
MAIN & AUX. CONTACT OPERATING TIMES	
CLOSING	50 MS MAX AT 18 VDC
OPENING	35 MS MAX AT 28 VDC
TRANSFER	10 MS AT 30 VDC
COIL CURRENT AT 29 V (EST) MAX & 25°C	.5 AMP MAX
INRUSH	5 AMP MAX
MIN. OPERATING CYCLES ELECTRICAL	50,000
MAX AMBIENT TEMPERATURE	-40°C TO +71°C
MAX WEIGHT	1 LB 8 OZ

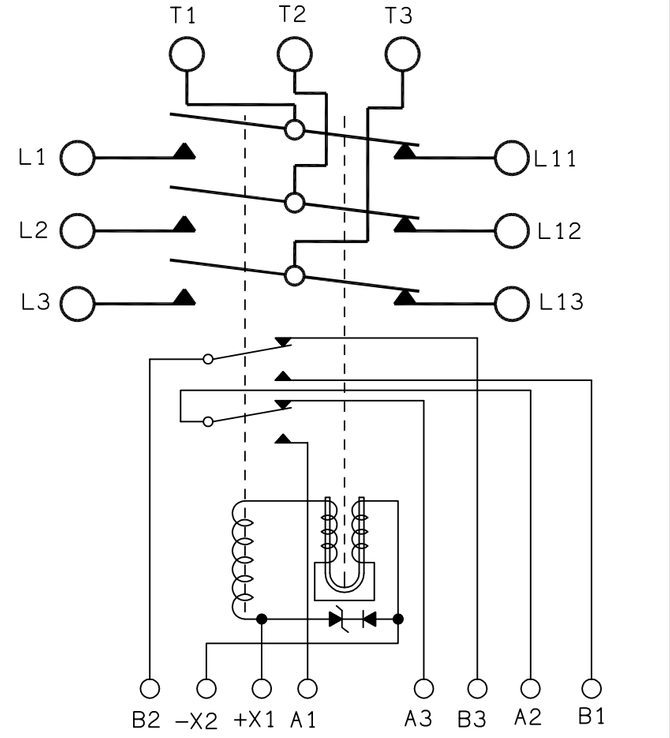

NOTES:
1. TERMINAL COVER TO BE STAMPED "DANGER HIGH VOLTAGE".
2. COIL TRANSIENT VOLTAGE LIMITED TO ±42 VOLTS REFERENCED TO ZERO VOLTS.

FIND NO	QTY REQD	PART OR IDENTIFYING NO	NOMENCLATURE OR DESCRIPTION	FSCM NO	DRAWING OR SPECIFICATION	MATERIAL OR NOTE
13	1	39529-001	OVERLAY			
12	9	51810-054	WASHER - LOCK NO.10 SPLIT		MS35338-100	BRONZE
11	8	51808-064	WASHER - LOCK NO.8 X .307 MAX. X .047 SPLIT		MS35338-99	BRONZE
10	2	51806-034	WASHER - LOCK NO. 6 INT.		MS35333-68	BRONZE
9	8	51712-104	WASHER - 3/8 X 11/64 X .032		AN961-8	BRASS
8	9	51702-844	WASHER - 3/8 X 13/64 X .032		AN961-10	BRASS
7	2	51206-644	SCREW - 6-32 X 3/4 RD. HD.		MS35214-29	BRASS
6	9	50410-174	NUT - 10-32 X 5/16 X 9/64 HEX.			BRASS
5	8	50408-034	NUT - 8-32 X 5/16 X 3/32 HEX.			BRASS
4	1	21432-040	CONTACTOR ASSEMBLY - PRIMARY			
3	1	16043-035	PLATE - NAME			
2	1	14898-001	PLATE - BASE COVER			
1	1	12531-003	SHIELD - TERMINAL			

UNLESS OTHERWISE SPECIFIED DIMENSIONS ARE IN INCHES TOLERANCES ON

2 PL DEC.	3 PL DEC.	ANGLES
±.03	±.010	± 1°

REF:
SIKORSKY
70550-22901-101

DR BY	LCB	93/09/02
CHK BY	WS	93/09/17
ENGR	KK	93/09/23
MFG	JF	93/09/22

SIZE	CODE IDENT
C	74063

SCALE NONE SHEET

TE Hartman™ Division · 175 N. DIAMOND STREET MANSFIELD, OHIO 44902

CONTACTOR - T.P.D.T. N.C.
093

DWG NO. B-138XEH

REF TE P/N 1616028-3