THIS DRAWING IS UNPUBLISHED. | RELEASED FOR PUBLICATION -,- .

LOC	DIST
DW	—

REVISIONS

P	LTR	DESCRIPTION	DATE	DWN	APVD
	B	REVISED (ECR-13-000306)	29FEB'13	E.L.	W.K.

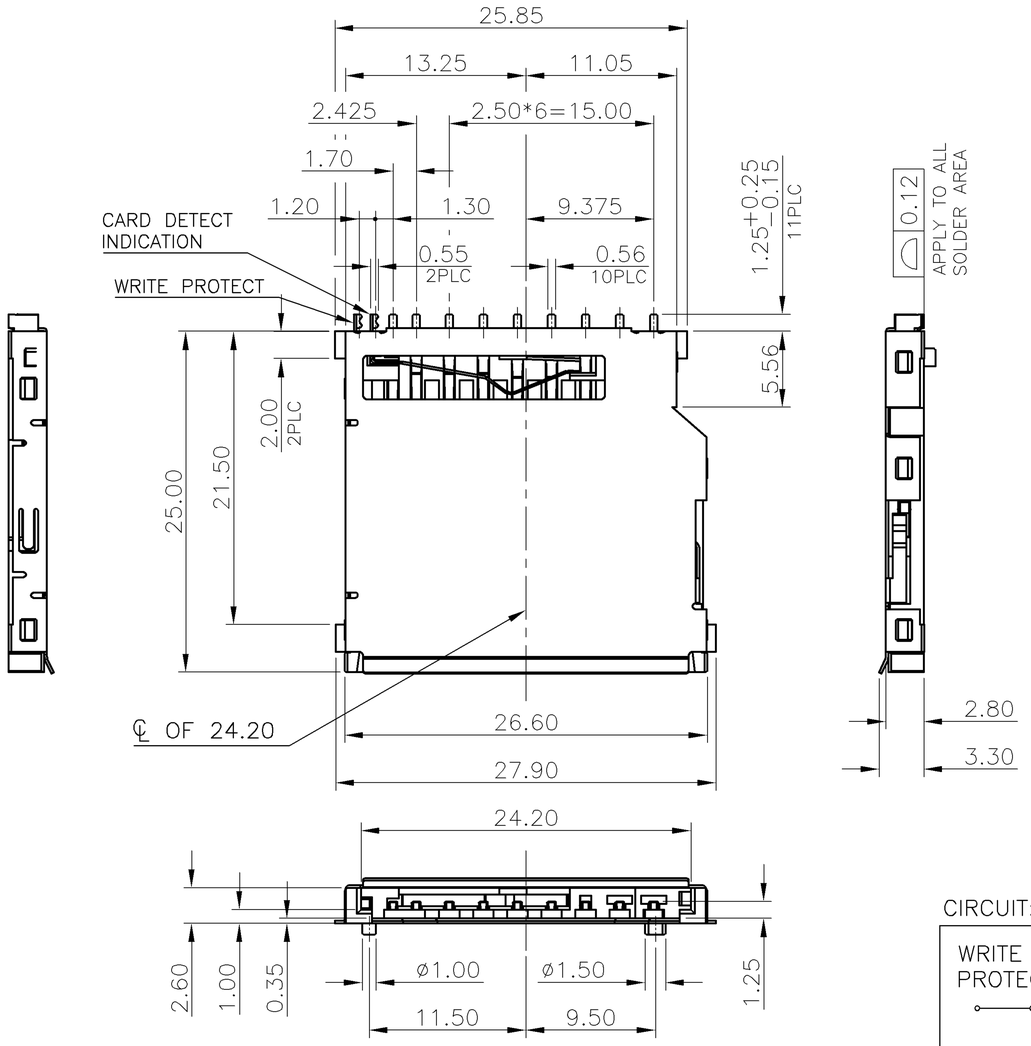

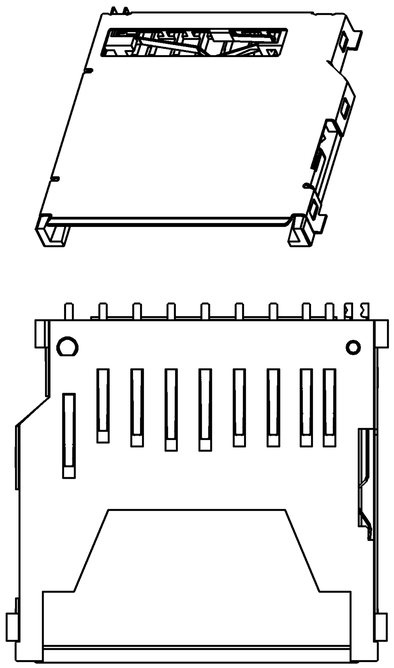

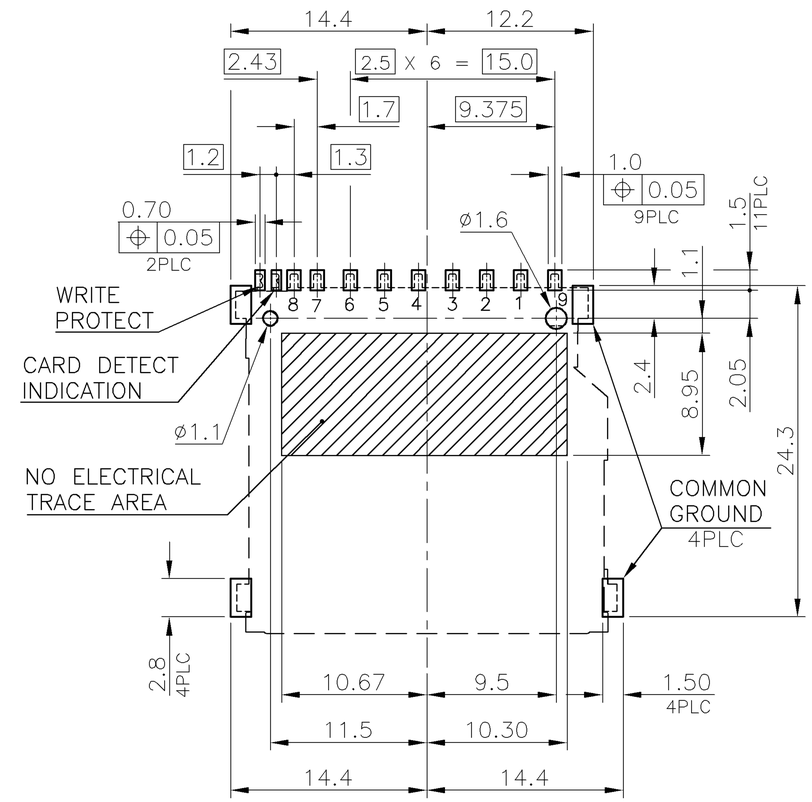

RECOMMENDED P.C.B LAYOUT
TOLERANCES: ±0.05

CIRCUIT:

WRITE PROTECT	CARD DETECT INDICATION	WRITE PROTECT	CARD DETECT INDICATION	WRITE PROTECT	CARD DETECT INDICATION
	GROUND		GROUND		GROUND
WIHOUT CARD		CARD INSERTED WRITE PROTECT:LOCK		CARD INSERTED WRITE PROTECT:UNLOCK	

1 .MATERIAL:
- 1.1 HOUSING: THERMOPLASTIC WITH 30% GF, UL94 V-0, COLOR: NATURAL.
- 1.3 CONTACTS: PHOSPHOR BRONZE. THICKNESS=0.15mm
- 1.4 SHIELD: STEEL ALLOY. THICKNESS=0.2mm

△2 .FINISH:
- 2.1 CONTACT: 0.762um [30u"] MIN GOLD PLATED ON CONTACT AREA.
  2.032um [80u"] MIN MATTE TIN PLATED ON SOLDER TAILS.
  1.27um [50u"] MIN NICKEL UNDERPLATE OVERALL.
- 2.2 SHIELD: GOLD FLASH ON SOLDERING AREA.
  0.762um [30u"] MIN NICKEL UNDERPLAED OVERALL.

△3 .FINISH:
- 3.1 CONTACT: 0.254um [10u"]MIN GOLD PLATED ON CONTACT AREA.
  2.032um [80u"] MIN MATTE TIN PLATED ON SOLDER TAILS.
  1.27um [50u"] MIN NICKEL UNDERPLATE OVERALL.
- 3.2 SHIELD: GOLD FLASH ON SOLDERING AREA.
  0.762um [30u"] MIN NICKEL UNDERPLAED OVERALL.

4. SWITCH: NORMALLY OPEN.
5. REFLOW SOLDER CAPABLE TO 260°C
   PER TE CONNECTIVITY SPEC 109-201, CONDITION B.

△3	REEL	2041021-4
△3	TRAY	2041021-3
OBSOLETE	~~△2~~	~~REEL~~	~~2041021-2~~
△2	TRAY	2041021-1
FINISH	PACKAGE	PART NUMBER

THIS DRAWING IS A CONTROLLED DOCUMENT.

DIMENSIONS: mm

TOLERANCES UNLESS OTHERWISE SPECIFIED:

0 PLC	± –
1 PLC	± 0.3
2 PLC	± 0.2
3 PLC	± 0.15
4 PLC	± –
ANGLES	± 3°

MATERIAL: SEE NOTE

FINISH: SEE NOTE

DWN	B. MCMASTER	25FEB2008
CHK	D. GORENC	25FEB2008
APVD	D. GORENC	25FEB2008
PRODUCT SPEC	108-2377	
APPLICATION SPEC	—	
WEIGHT	1.73 GRAMS	

TE Connectivity

NAME: SECURE DIGITAL CARD CONNECTOR TOP MOUNT, SMT TYPE, H=2.80mm

SIZE	CAGE CODE	DRAWING NO	RESTRICTED TO
A3	00779	C-2041021	—

CUSTOMER DRAWING | SCALE — | SHEET 1 OF 3 | REV B

1470-19 (1/08)

THIS DRAWING IS UNPUBLISHED. | RELEASED FOR PUBLICATION – ,– .

LOC	DIST
DW	—

REVISIONS

P	LTR	DESCRIPTION	DATE	DWN	APVD
		SEE SHEET 1.			

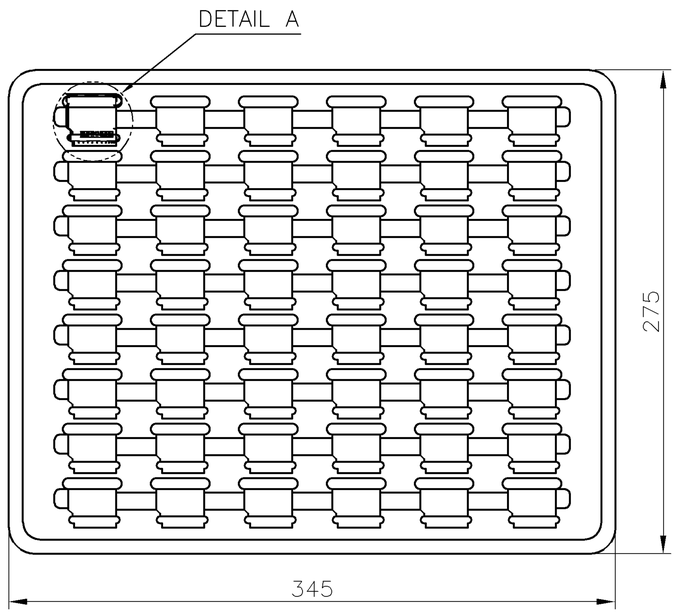

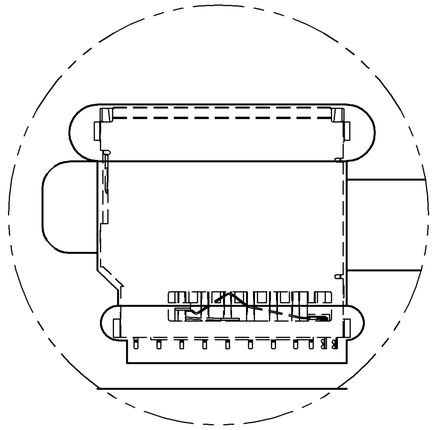

DETAIL A
SCACE 4:1
PART ORIENTATION
SHOWN FOR REFERENCE

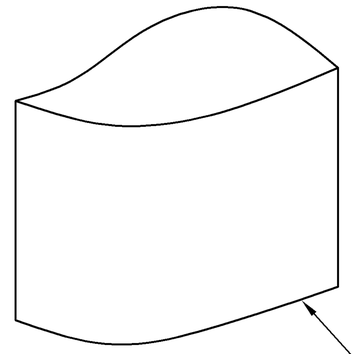

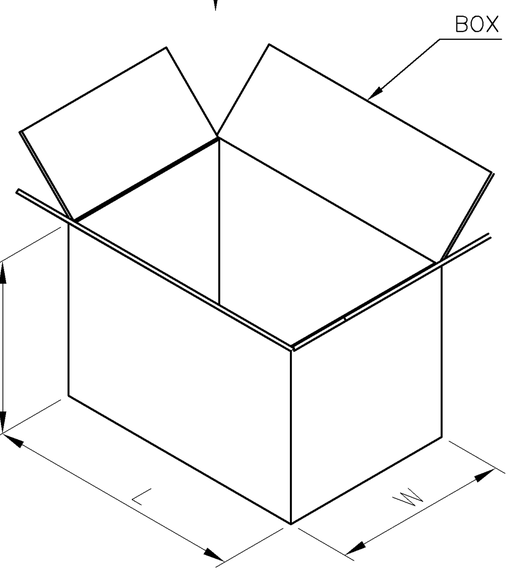

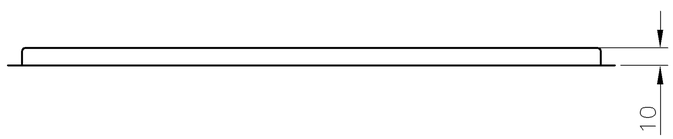

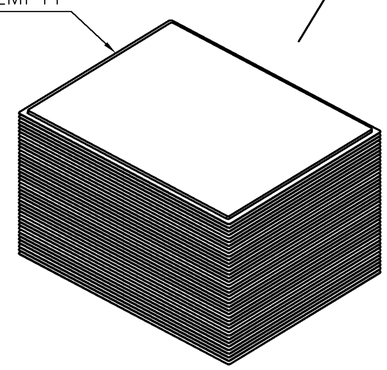

NOTES:
1. MATERIAL:
   TRAY: PS.
   BAG: PE
   BOX: CORRUGATED FIBERBOARD
2. DIMENSION:
   TRAY: L=345mm, W=275mm, H=10mm
   BAG: L=700mm, W=600mm, THICKNESS=0.1mm
   BOX: L=355mm, W=285mm, H=195mm
3. EACH BAG SHALL BE INCLUDED:
   * DESICCANT
3. QUANTITY: SEE TABLE
4. WEIGHT: SEE TABLE

GROSS WEIGHT	NET WEIGHT	PCS/ TRAY	TRAY/ BOX	PCS/ BOX	PART NUMBER
4.6 KG	2.13 KG	48	25	1200	2041021–3 2041021–1

THIS DRAWING IS A CONTROLLED DOCUMENT.

DIMENSIONS: mm

TOLERANCES UNLESS OTHERWISE SPECIFIED:

0 PLC	± –
1 PLC	± 0.3
2 PLC	± 0.2
3 PLC	± 0.15
4 PLC	± –
ANGLES	± 3°

MATERIAL –

FINISH –

DWN –
CHK –
APVD –
PRODUCT SPEC —
APPLICATION SPEC —
WEIGHT —

TE Connectivity

NAME
SECURE DIGITAL CARD CONNECTOR
TOP MOUNT, SMT TYPE, H=2.80mm

SIZE	CAGE CODE	DRAWING NO	RESTRICTED TO
A3	00779	C-2041021	—

CUSTOMER DRAWING | SCALE — | SHEET 2 OF 3 | REV B

1470–19 (1/08)

THIS DRAWING IS UNPUBLISHED. | RELEASED FOR PUBLICATION – ,– .

LOC	DIST
DW	–

REVISIONS

P	LTR	DESCRIPTION	DATE	DWN	APVD
		SEE SHEET 1.			

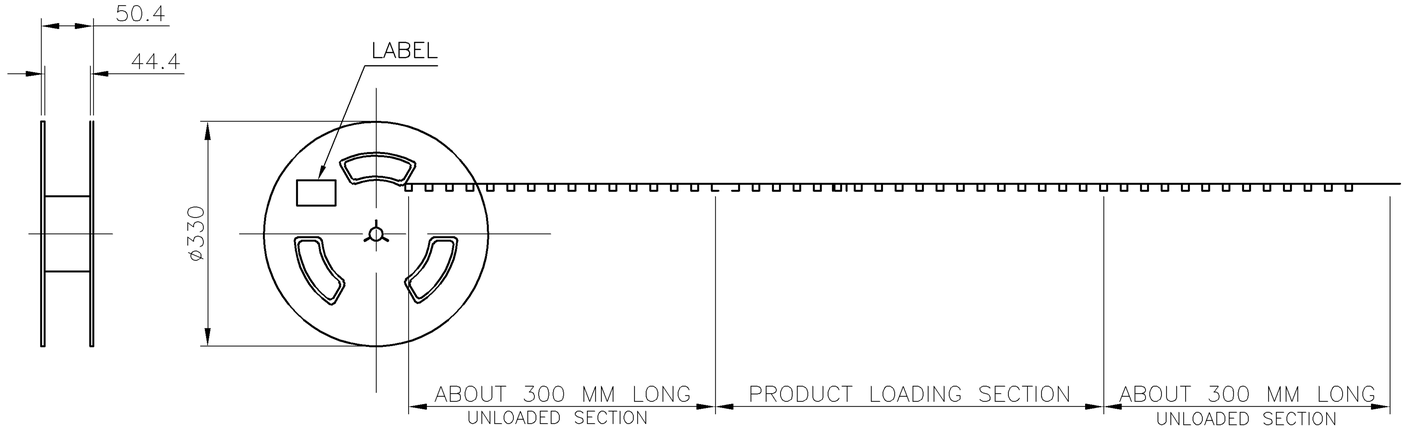

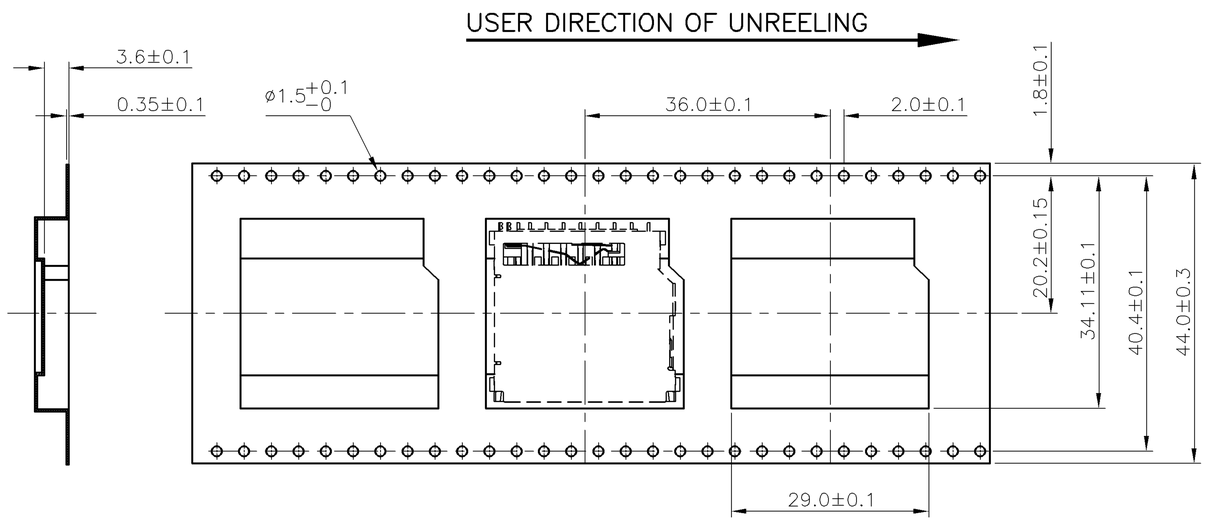

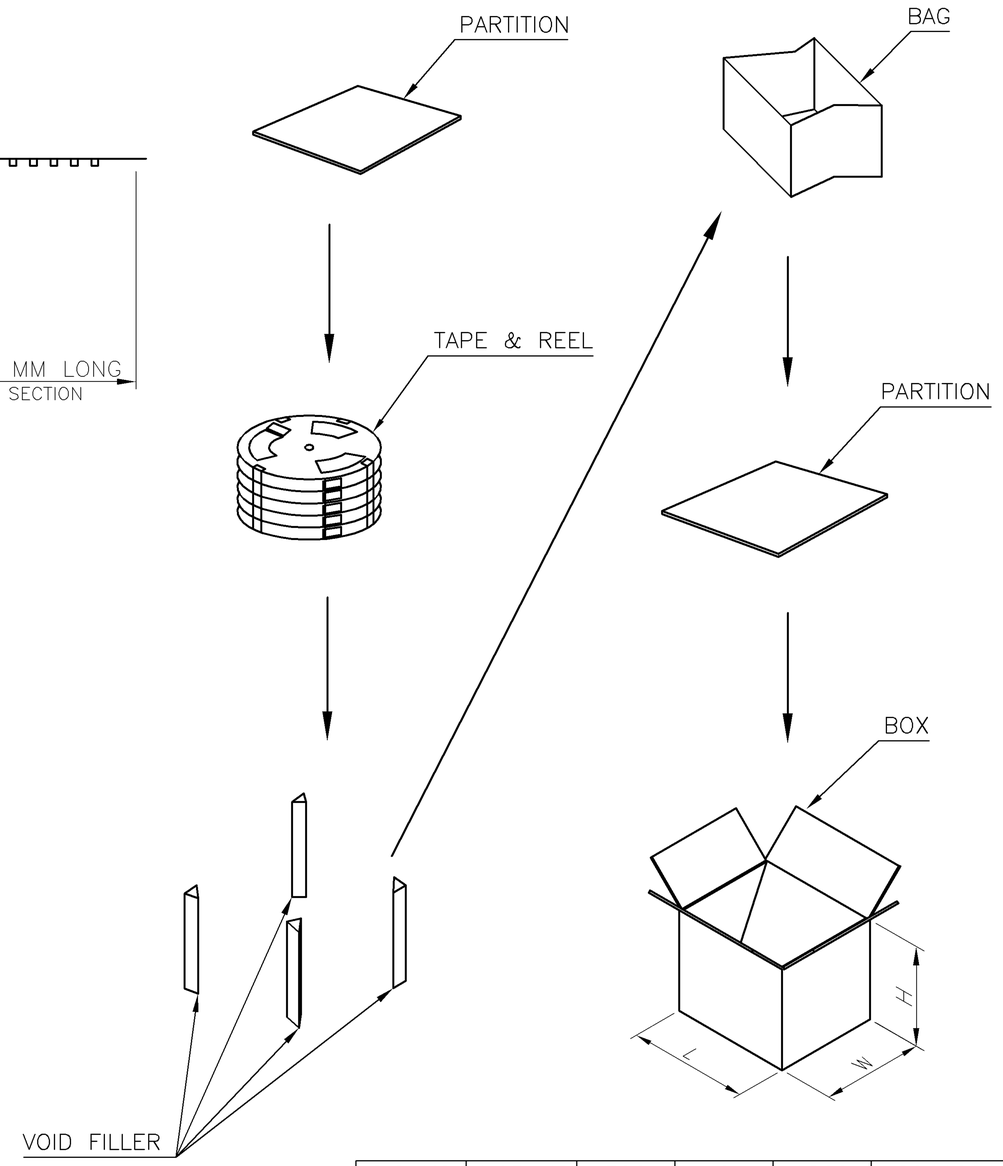

NOTES:

1. MATERIAL:
   REEL: PS
   BAG: PE
   BOX: CORRUGATED FIBERBOARD
2. DIMENSION:
   REEL: ø330*50.4
   BAG: L=850mm, W=600mm, THICKNESS=0.1mm
   BOX: L=350mm, W=350mm, H=420mm
3. EACH BAG SHALL BE INCLUDED:
   * DESICCANT
3. QUANTITY: SEE TABLE
4. WEIGHT: SEE TABLE

GROSS WEIGHT	NET WEIGHT	PCS/ REEL	REEL/ BOX	PCS/ BOX	PART NUMBER
8.8 KG	4.15 KG	300	6	1800	2041021–4

THIS DRAWING IS A CONTROLLED DOCUMENT.

DIMENSIONS: mm

TOLERANCES UNLESS OTHERWISE SPECIFIED:

0 PLC	± –
1 PLC	± 0.3
2 PLC	± 0.2
3 PLC	± 0.15
4 PLC	± –
ANGLES	± 3'

MATERIAL –

FINISH –

DWN –
CHK –
APVD –
PRODUCT SPEC –
APPLICATION SPEC –
WEIGHT –

CUSTOMER DRAWING

TE Connectivity

NAME

SECURE DIGITAL CARD CONNECTOR
TOP MOUNT, SMT TYPE, H=2.80mm

SIZE	CAGE CODE	DRAWING NO	RESTRICTED TO
A3	00779	C-2041021	–

SCALE – | SHEET 3 OF 3 | REV B

1470–19 (1/08)