THIS DRAWING IS UNPUBLISHED. RELEASED FOR PUBLICATION -
© COPYRIGHT copyright_date BY - ALL RIGHTS RESERVED.

REVISIONS

| P | LTR | DESCRIPTION | DATE | DWN | APVD |
|---|---|---|---|---|---|
| | A1 | REVISED | 29MAR17 | J.W | C.W |

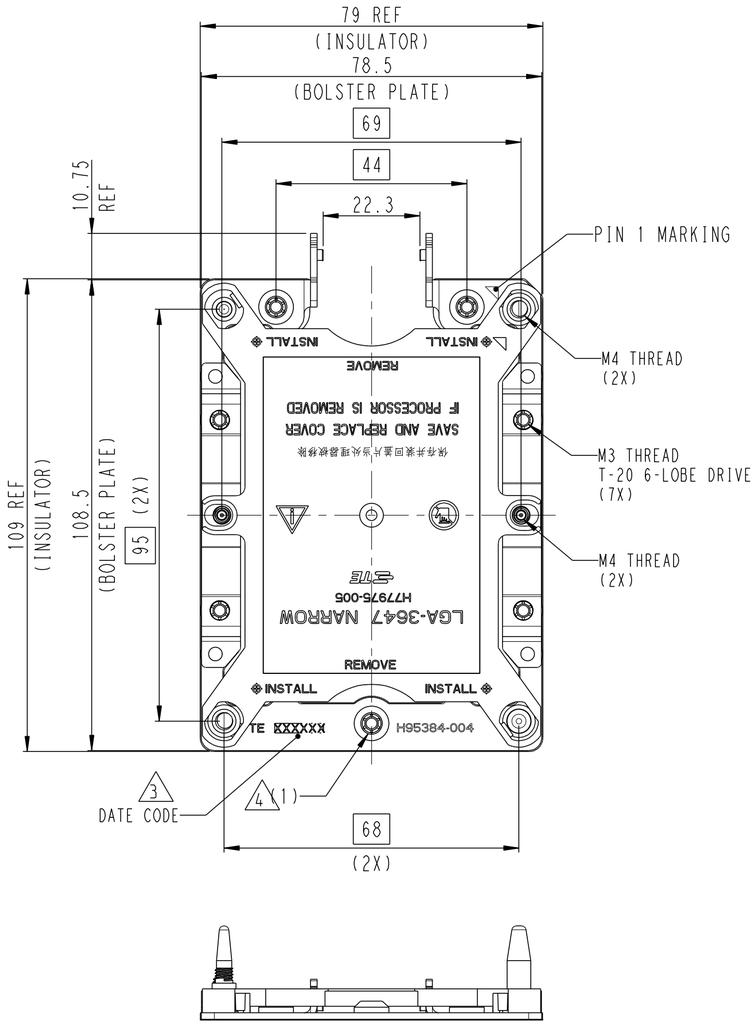


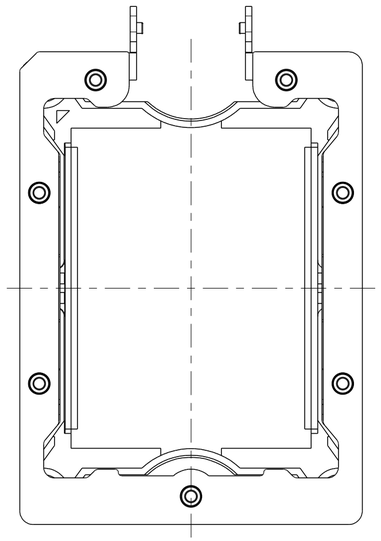

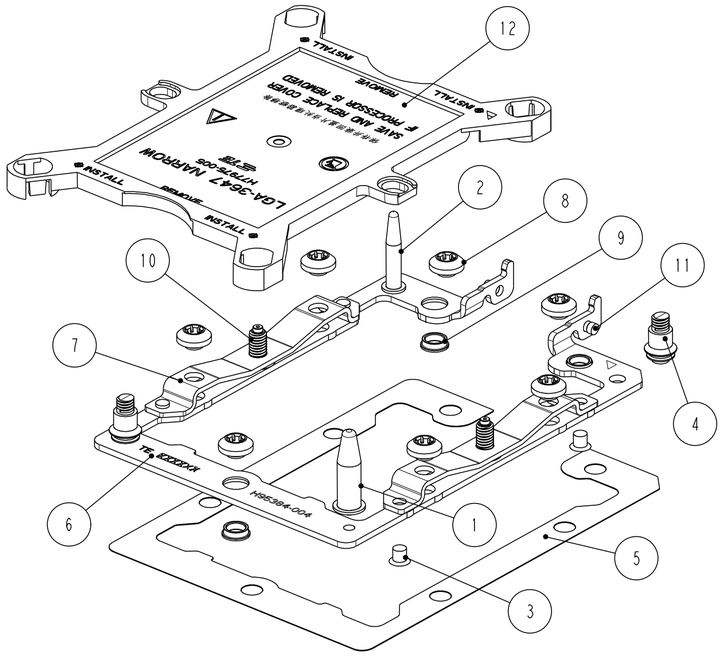




NOTES:
1. MATERIAL:
   1. BOLSTER LARGE GUIDE POST: STAINLESS STEEL
   2. BOLSTER SMALL GUIDE POST: STAINLESS STEEL
   3. SKT-P-KNL,SPRING RIVET: STAINLESS STEEL
   4. SKX BOLSTER CORNER STANDOFF: STAINLESS STEEL
   5. SKX NRW NON FABRIC BOLSTER INSULATOR:
      -POLYCARBONATE FILM PLUS ACRYLIC ADHESIVE LAYER
   6. SKX NRW NON FABRIC BOLSTER PLATE: STAINLESS STEEL
   7. SKX-EP NRW SPRING: STAINLESS STEEL
   8. SOCKET P M3 BOLSTER CAPTIVE NUT: CARBON STEEL, NICKEL PLATING
   9. SOCKET P M3 BOLSTER CAPTIVE NUT COLLAR: CARBON STEEL, NICKEL PLATING
   10. SKT-EP SPRING STUD: STAINLESS STEEL
   11. KNL BOLSTER LEC GUIDE PIN: STAINLESS STEEL
   12. NRW DUST COVER: THERMO-PLASTIC, UL94V-0, BLACK
2. ASSEMBLED WITH BOLSTER ASSEMBLY P/N: 2299805 SERIES
3. INDICATED DATE CODE ON THE BOLSTER PLATE
4. NUT ASSEMBLY SEQUENCE FOR 6 CYCLES:
   ASSEMBLE (1) AND THE REMAINING NUTS IN ANY ORDER.
   DISSASSEMBLE IN REVERSE ORDER OF ASSEMBLE

P/N: 2310924-1 AS SHOW
(NRW FABRIC TYPE WITH COVER)

| Q'TY | DESCRIPTION | ITEM |
|---|---|---|
| 1 | NRW DUST COVER | 12 |
| 2 | KNL BOLSTER LEC GUIDE PIN | 11 |
| 2 | SKT-EP SPRING STUD | 10 |
| 3 | SOCKET P M3 BOLSTER CAPTIVE NUT COLLAR | 9 |
| 7 | SOCKET P M3 BOLSTER CAPTIVE NUT | 8 |
| 2 | SKX-EP NRW SPRING | 7 |
| 1 | SKX NRW FABRIC BOLSTER PLATE | 6 |
| 1 | SKX NRW NON FABRIC BOLSTER INSULATOR | 5 |
| 2 | SKX BOLSTER CORNER STANDOFF | 4 |
| 4 | SKT-P-KNL, SPRING RIVET | 3 |
| 1 | KNL BOLSTER SMALL GUIDE POST | 2 |
| 1 | KNL BOLSTER LARGE GUIDE POST | 1 |

THIS DRAWING IS A CONTROLLED DOCUMENT.

DIMENSIONS: mm

TOLERANCES UNLESS OTHERWISE SPECIFIED:
0 PLC ±0.3
1 PLC ±0.3
2 PLC ±0.3
3 PLC ±0.3
4 PLC ±0.3
ANGLES ±3

MATERIAL -
FINISH -

DWN JEFF WANG 14-Nov-2016
CHK SIMON LI 14-Nov-2016
APVD COREL WANG 14-Nov-2016
PRODUCT SPEC 108-115115
APPLICATION SPEC 114-115011
WEIGHT -

TE Connectivity

NAME SKX-EP NRW FABRIC BOLSTER PLATE ASSY

| SIZE | CAGE CODE | DRAWING NO | RESTRICTED TO |
|---|---|---|---|
| A2 | - | C-2310924 | - |

CUSTOMER DRAWING | SCALE 1:1 | SHEET 1 OF 2 | REV A1

THIS DRAWING IS UNPUBLISHED. RELEASED FOR PUBLICATION -
© COPYRIGHT copyright_date BY - ALL RIGHTS RESERVED.

REVISIONS

| P | LTR | DESCRIPTION | DATE | DWN | APVD |
|---|---|---|---|---|---|
| | - | SEE SHEET 1 | - | - | - |

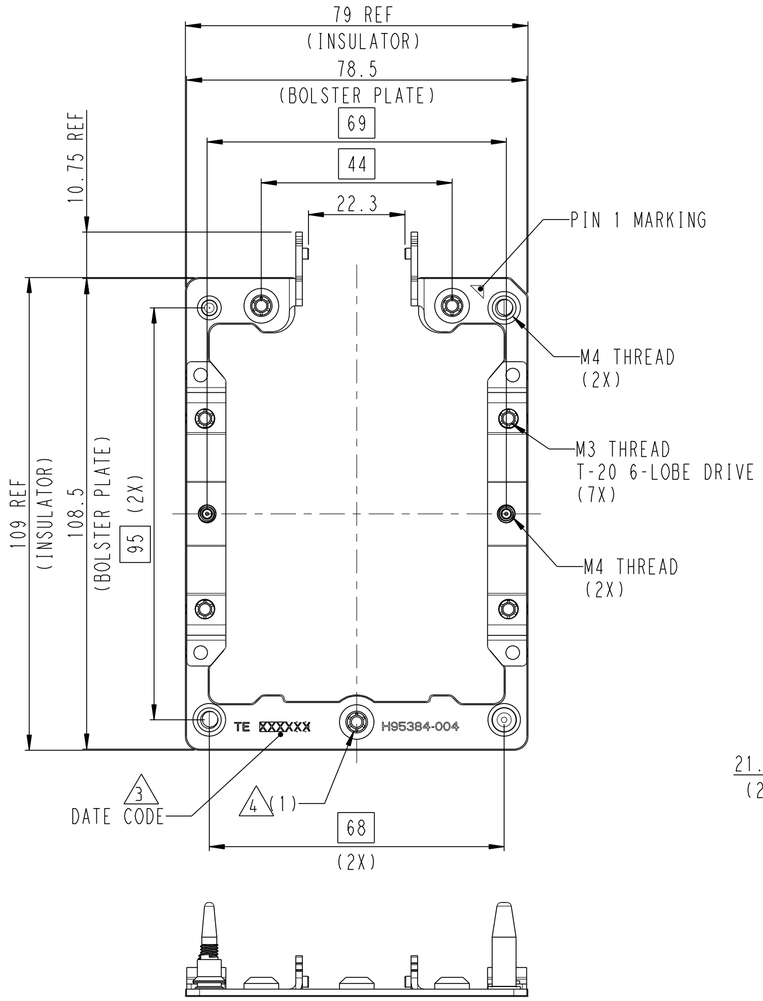


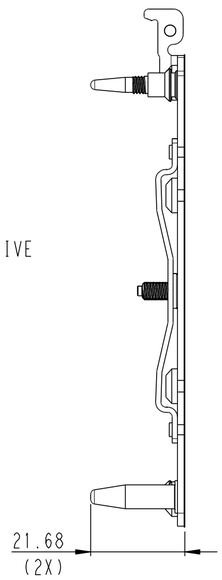


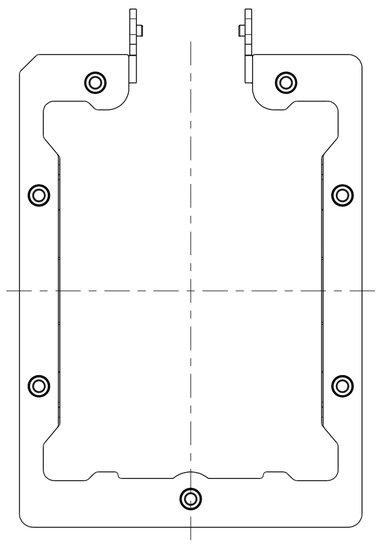

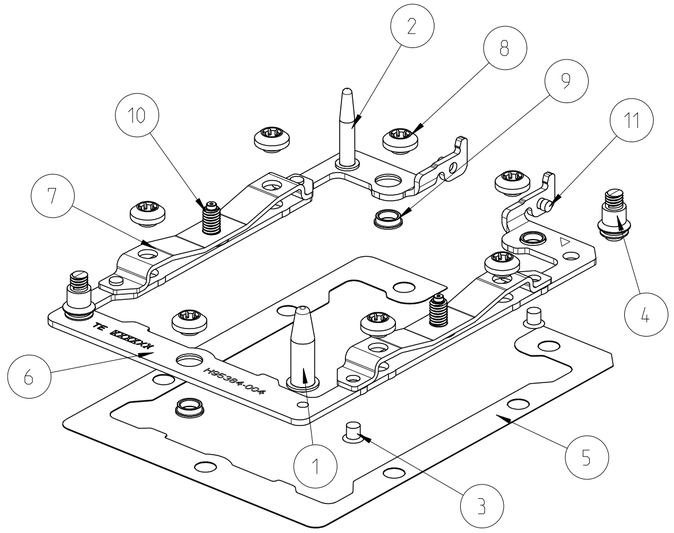


NOTES:
1. MATERIAL:
   1. BOLSTER LARGE GUIDE POST: STAINLESS STEEL
   2. BOLSTER SMALL GUIDE POST: STAINLESS STEEL
   3. SKT-P-KNL,SPRING RIVET: STAINLESS STEEL
   4. SKX BOLSTER CORNER STANDOFF: STAINLESS STEEL
   5. SKX NRW NON FABRIC BOLSTER INSULATOR:
      -POLYCARBONATE FILM PLUS ACRYLIC ADHESIVE LAYER
   6. SKX NRW NON FABRIC BOLSTER PLATE: STAINLESS STEEL
   7. SKX-EP NRW SPRING: STAINLESS STEEL
   8. SOCKET P M3 BOLSTER CAPTIVE NUT: CARBON STEEL, NICKEL PLATING
   9. SOCKET P M3 BOLSTER CAPTIVE NUT COLLAR: CARBON STEEL, NICKEL PLATING
   10. SKT-EP SPRING STUD: STAINLESS STEEL
   11. KNL BOLSTER LEC GUIDE PIN: STAINLESS STEEL
2. ASSEMBLED WITH BOLSTER ASSEMBLY P/N: 2299805 SERIES
3. INDICATED DATE CODE ON THE BOLSTER PLATE
4. NUT ASSEMBLY SEQUENCE FOR 6 CYCLES:
   ASSEMBLE (1) AND THE REMAINING NUTS IN ANY ORDER.
   DISSASSEMBLE IN REVERSE ORDER OF ASSEMBLE

P/N: 2310924-3 AS SHOW
(NRW FABRIC TYPE WITHOUT COVER)

| Q'TY | DESCRIPTION | ITEM |
|---|---|---|
| 2 | KNL BOLSTER LEC GUIDE PIN | 11 |
| 2 | SKT-EP SPRING STUD | 10 |
| 3 | SOCKET P M3 BOLSTER CAPTIVE NUT COLLAR | 9 |
| 7 | SOCKET P M3 BOLSTER CAPTIVE NUT | 8 |
| 2 | SKX-EP NRW SPRING | 7 |
| 1 | SKX NRW FABRIC BOLSTER PLATE | 6 |
| 1 | SKX NRW NON FABRIC BOLSTER INSULATOR | 5 |
| 2 | SKX BOLSTER CORNER STANDOFF | 4 |
| 4 | SKT-P-KNL, SPRING RIVET | 3 |
| 1 | KNL BOLSTER SMALL GUIDE POST | 2 |
| 1 | KNL BOLSTER LARGE GUIDE POST | 1 |

THIS DRAWING IS A CONTROLLED DOCUMENT.

DIMENSIONS: mm

TOLERANCES UNLESS OTHERWISE SPECIFIED:
0 PLC ±0.3
1 PLC ±0.3
2 PLC ±0.3
3 PLC ±0.3
4 PLC ±0.3
ANGLES ±3

MATERIAL -
FINISH -

DWN JEFF WANG 14-Nov-2016
CHK SIMON LI 14-Nov-2016
APVD COREL WANG 14-Nov-2016
PRODUCT SPEC 108-115115
APPLICATION SPEC 114-115011
WEIGHT -

TE Connectivity

NAME SKX-EP NRW FABRIC BOLSTER PLATE ASSY

SIZE A2 | CAGE CODE - | DRAWING NO C-2310924 | RESTRICTED TO -

CUSTOMER DRAWING | SCALE 1:1 | SHEET 2 OF 2 | REV A1