THIS DRAWING IS UNPUBLISHED. RELEASED FOR PUBLICATION 20
© COPYRIGHT 20 BY - ALL RIGHTS RESERVED.

LOC	DIST
FT	0

REVISIONS

P	LTR	DESCRIPTION	DATE	DWN	APVD
	E3	REVISED PER ECO-14-015436	13OCT2014	NK	MM

1 MATERIALS AND FINISH
HOUSING: PA 6-6, UL 94-V0, COLOR: GREEN.
CLAMP: BRASS, NICKEL PLATED.
CONTACT SPRING : PHOSPHOR BRONZE, TIN PLATED.
CLAMPING SCREW: M3, BRASS, NICKEL PLATED.

2 WIRE SIZE RANGE: 12 - 30 AWG.

3 NOT CUMULATIVE TOLERANCE.

4 INK MARKING, COLOR: BLACK.

5 WIRE ENTRY CLOSED

6 PRELIMINARY - NOT RELEASED FOR PRODUCTION

7 HOUSING: PA 6-6, UL 94-V0, COLOR:YELLOW

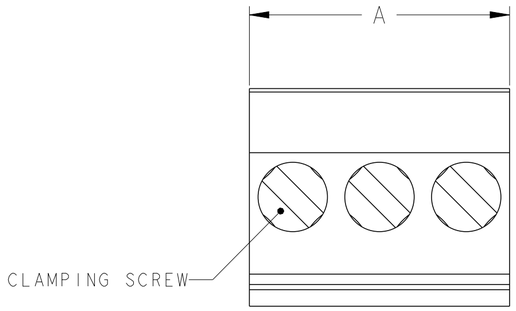

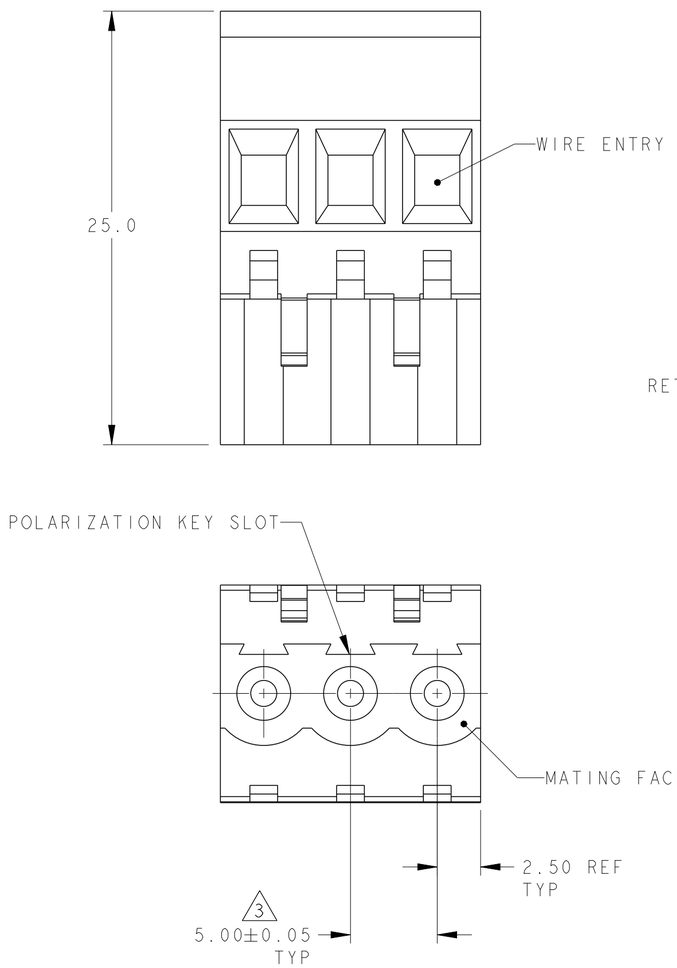

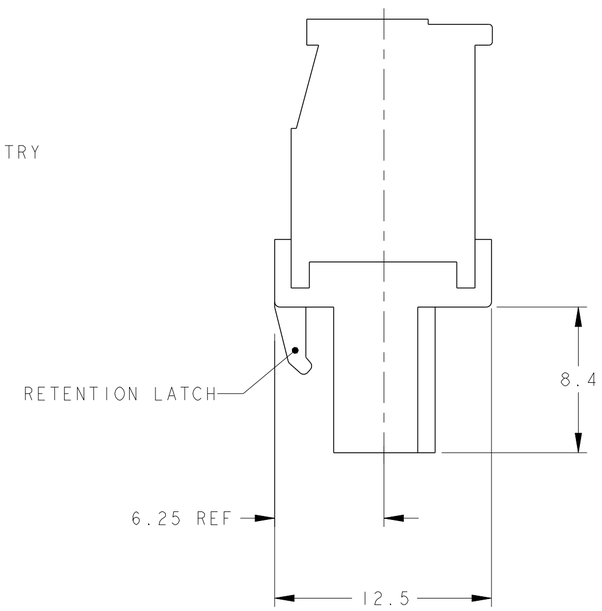

7 6	TIN PLATED	-	15.0	3	3-284046-6
6	TIN PLATED	SEE SHEET 3	70.0	14	3-284046-5
6	TIN PLATED	SEE SHEET 3	50.0	10	3-284046-4
6	TIN PLATED	SEE SHEET 3	90.0	18	3-284046-3
6	TIN PLATED	SEE SHEET 3	80.0	16	3-284046-2
	TIN PLATED	SEE SHEET 2	15.0	3	3-284046-1
		SEE SHEET 2	10.0	2	3-284046-0
	0.00076[.000030] SELECT GOLD	SEE SHEET 2	25.0	5	2-284046-9
		-	25.0	5	2-284046-8
	TIN PLATED	SEE SHEET 2	65.0	13	2-284046-7
		SEE SHEET 2	40.0	8	2-284046-6
		-	125.0	25	2-284046-5
		-	120.0	24	2-284046-4
		-	115.0	23	2-284046-3
		-	110.0	22	2-284046-2
		-	150.0	21	2-284046-1
		-	100.0	20	2-284046-0
		-	95.0	19	1-284046-9
		-	90.0	18	1-284046-8
		-	85.0	17	1-284046-7
		-	80.0	16	1-284046-6
		-	75.0	15	1-284046-5
		-	70.0	14	1-284046-4
		-	65.0	13	1-284046-3
		-	60.0	12	1-284046-2
		-	55.0	11	1-284046-1
		-	50.0	10	1-284046-0
		-	45.0	9	284046-9
		-	40.0	8	284046-8
		-	35.0	7	284046-7
		-	30.0	6	284046-6
		-	25.0	5	284046-5
		-	20.0	4	284046-4
		-	15.0	3	284046-3
		-	10.0	2	284046-2
	CONTACT FINISH	MARKING	A	NO OF POSN	PART NUMBER

THIS DRAWING IS A CONTROLLED DOCUMENT.

DIMENSIONS: mm

TOLERANCES UNLESS OTHERWISE SPECIFIED:
0 PLC ±-
1 PLC ±0.30
2 PLC ±0.25
3 PLC ±-
4 PLC ±-
ANGLES ±2°

MATERIAL 1

FINISH 1

DWN S.WELDON 05FEB2003
CHK C.RICHARD 05FEB2003
APVD C.RICHARD 05FEB2003
PRODUCT SPEC -
APPLICATION SPEC -
WEIGHT -

TE Connectivity

NAME TERMINAL BLOCK, VERTICAL PLUG, STACKING, RIGHT HAND, 5.00mm PITCH

SIZE	CAGE CODE	DRAWING NO	RESTRICTED TO
A2	00779	C-284046	-

CUSTOMER DRAWING | SCALE 4:1 | SHEET 1 OF 3 | REV E3

THIS DRAWING IS UNPUBLISHED. RELEASED FOR PUBLICATION 20
© COPYRIGHT 20 BY - ALL RIGHTS RESERVED.

LOC	DIST
FT	0

REVISIONS

P	LTR	DESCRIPTION	DATE	DWN	APVD
	-	SEE SHEET 1	-	-	-

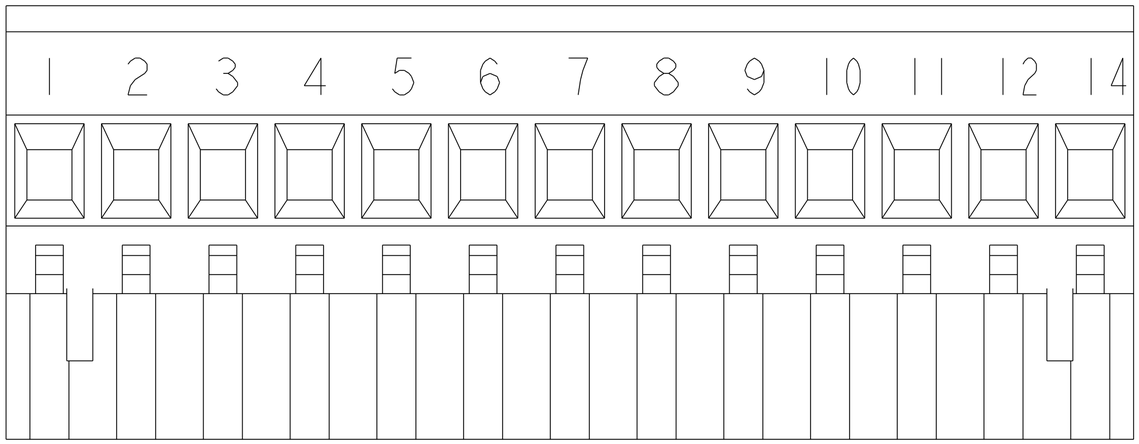

2-284046-7 AS SHOWN

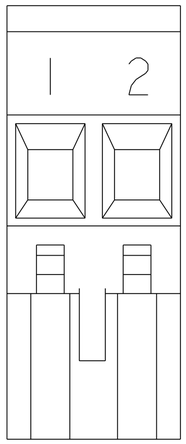

3-284046-0 AS SHOWN

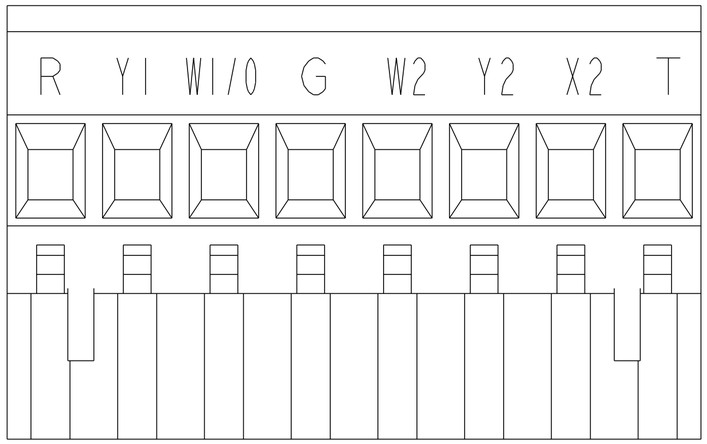

2-284046-6 AS SHOWN

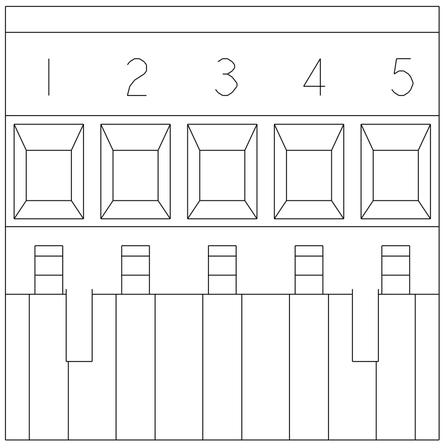

2-284046-9 AS SHOWN

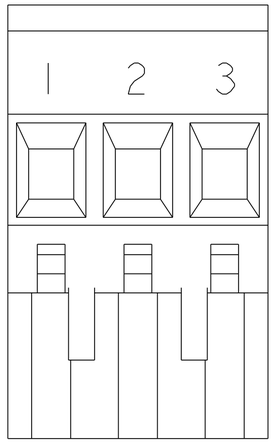

3-284046-1 AS SHOWN

THIS DRAWING IS A CONTROLLED DOCUMENT.

DIMENSIONS: mm

TOLERANCES UNLESS OTHERWISE SPECIFIED:
0 PLC ±-
1 PLC ±0.30
2 PLC ±0.25
3 PLC ±-
4 PLC ±-
ANGLES ±2°

MATERIAL

FINISH

DWN	S.WELDON	05FEB2003
CHK	C.RICHARD	05FEB2003
APVD	C.RICHARD	05FEB2003
PRODUCT SPEC	-	
APPLICATION SPEC	-	
WEIGHT	-	

TE Connectivity

NAME
TERMINAL BLOCK, VERTICAL PLUG, STACKING, RIGHT HAND, 5.00mm PITCH

SIZE	CAGE CODE	DRAWING NO	RESTRICTED TO
A2	00779	C-284046	-

CUSTOMER DRAWING | SCALE 4:1 | SHEET 2 OF 3 | REV E3

THIS DRAWING IS UNPUBLISHED. RELEASED FOR PUBLICATION 20
© COPYRIGHT 20 BY - ALL RIGHTS RESERVED.

LOC	DIST
FT	0

REVISIONS

P	LTR	DESCRIPTION	DATE	DWN	APVD
	-	SEE SHEET 1	-	-	-

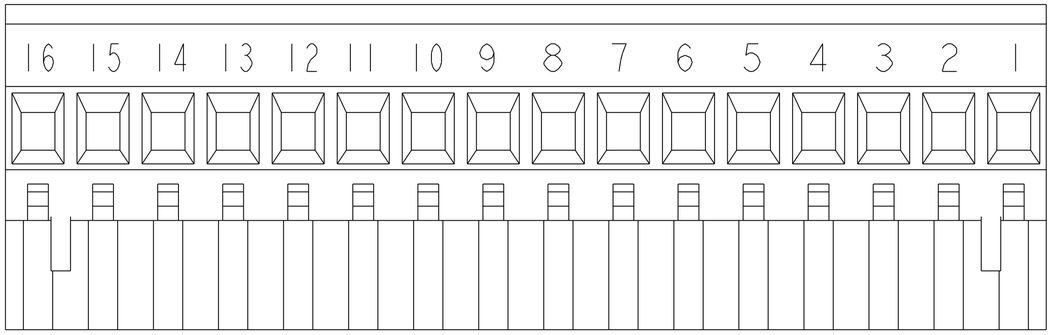

3-284046-2 AS SHOWN (5)

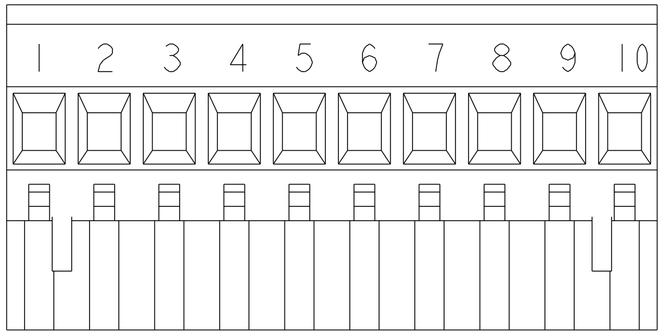

3-284046-4 AS SHOWN

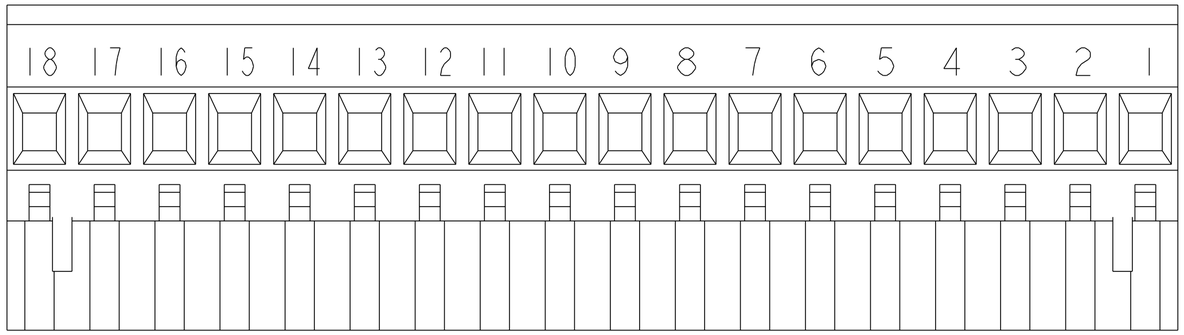

3-284046-3 AS SHOWN (5)

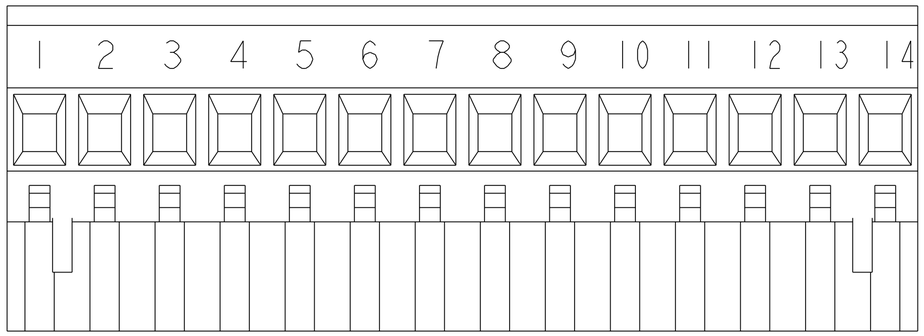

3-284046-5 AS SHOWN

THIS DRAWING IS A CONTROLLED DOCUMENT.

DIMENSIONS: mm

TOLERANCES UNLESS OTHERWISE SPECIFIED:
0 PLC ±-
1 PLC ±0.30
2 PLC ±0.25
3 PLC ±-
4 PLC ±-
ANGLES ±2°

MATERIAL

FINISH

DWN S.WELDON 05FEB2003
CHK C.RICHARD 05FEB2003
APVD C.RICHARD 05FEB2003
PRODUCT SPEC -
APPLICATION SPEC -
WEIGHT -

TE Connectivity

NAME TERMINAL BLOCK, VERTICAL PLUG, STACKING, RIGHT HAND, 5.00mm PITCH

SIZE	CAGE CODE	DRAWING NO	RESTRICTED TO
A2	00779	C-284046	-

CUSTOMER DRAWING | SCALE 4:1 | SHEET 3 OF 3 | REV E3

1471-9 (3/11)