THIS DRAWING IS UNPUBLISHED. RELEASED FOR PUBLICATION -,- .
© COPYRIGHT - BY TYCO ELECTRONICS CORPORATION. ALL RIGHTS RESERVED.

| LOC | DIST |
|---|---|
| CM | 0 |

REVISIONS

| P | LTR | DESCRIPTION | DATE | DWN | APVD |
|---|---|---|---|---|---|
| | F | ECO-06-012706 | 07JUN06 | BSV | JR |

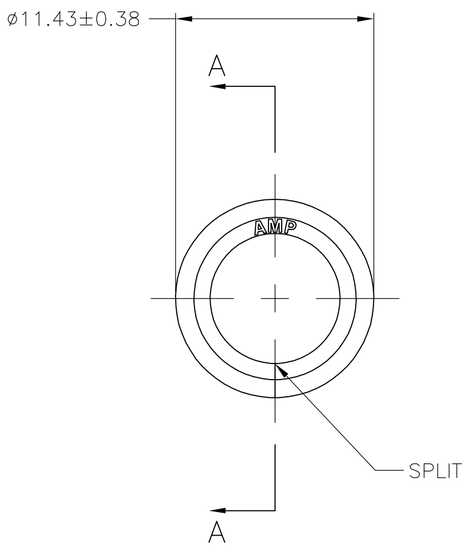


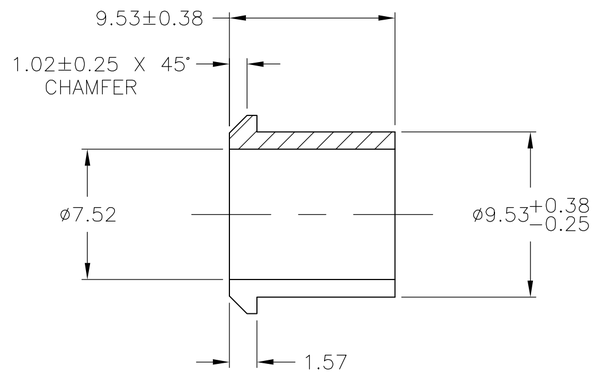


SECTION A–A

1. USE WITH STRAIN RELIEF 350373.
2. MOLDING COMPOUND PVC,FLEXIBLE, 55/75 DUROMETER (B SCALE),BLACK.
3. MOLDING COMPOUND PVC,FLEXIBLE,BLACK.

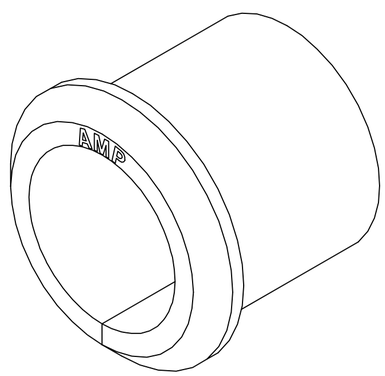


3–DIMENSIONAL MODEL
NTS

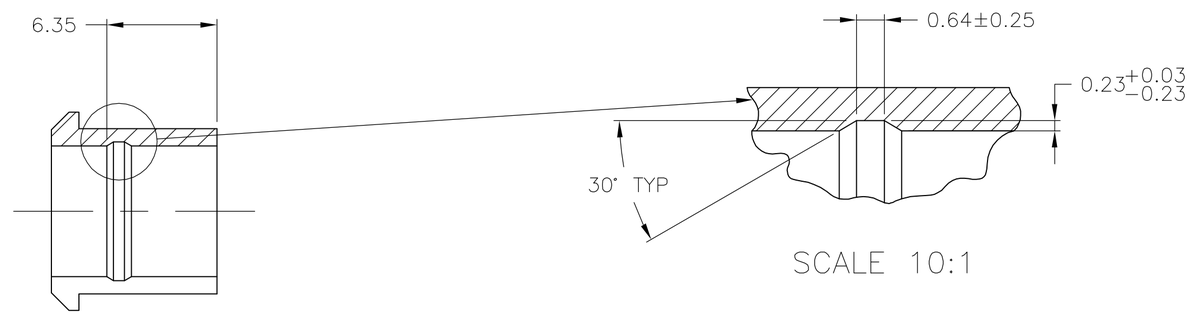


SCALE 10:1

SECTION A–A
OPTIONAL CONSTRUCTION

| | | |
|---|---|---|
| 3 | 2–350375–0 | |
| 2 | 1–350375–0 | |
| MATERIAL | PART NUMBER | |

SUPERCEDED BY 2–350375–0

| | | | | | |
|---|---|---|---|---|---|
| 0.25 | .010 | 1.57 | .062 | 11.43 | .450 |
| 0.23 | .009 | 1.02 | .040 | 9.53 | .375 |
| 0.13 | .005 | 0.64 | .025 | 7.52 | .296 |
| 0.03 | .001 | 0.38 | .015 | 6.35 | .250 |
| MM | IN | MM | IN | MM | IN |

CONVERSION TABLE

METRIC

THIS DRAWING IS A CONTROLLED DOCUMENT.

DIMENSIONS: mm

TOLERANCES UNLESS OTHERWISE SPECIFIED:
0 PLC ± –
1 PLC ± –
2 PLC ± –
3 PLC ± 0.13
4 PLC ± –
ANGLES ± 1°0'

MATERIAL: SEE TABLE
FINISH: –

DWN K. WHITAKER 23MAR06
CHK C. JONES 23MAR06
APVD C. JONES 23MAR06
PRODUCT SPEC –
APPLICATION SPEC –
WEIGHT –
CUSTOMER DRAWING

tyco Electronics
Tyco Electronics Corporation
Harrisburg, Pa 17105–3608

NAME: GROMMET,SPLIT,M.R.
–
–

| SIZE | CAGE CODE | DRAWING NO | RESTRICTED TO |
|---|---|---|---|
| A2 | 00779 | C-350375 | – |

SCALE 4:1 SHEET 1 OF 1 REV F

350375