REVISIONS		
LTR	DESCRIPTION	DATE
C	REVISED PER ECD-08-021113	08/26/2008

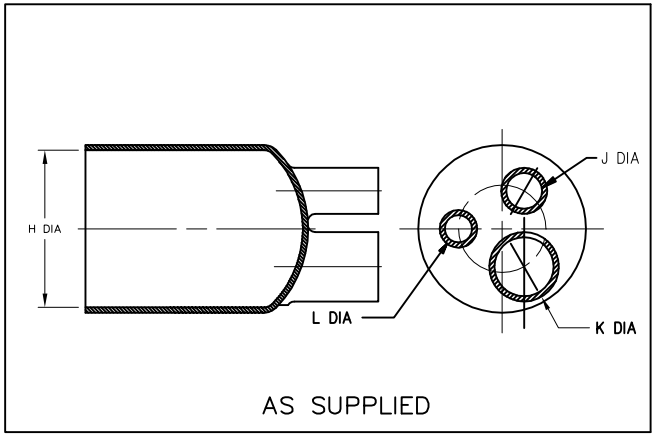

AS SUPPLIED

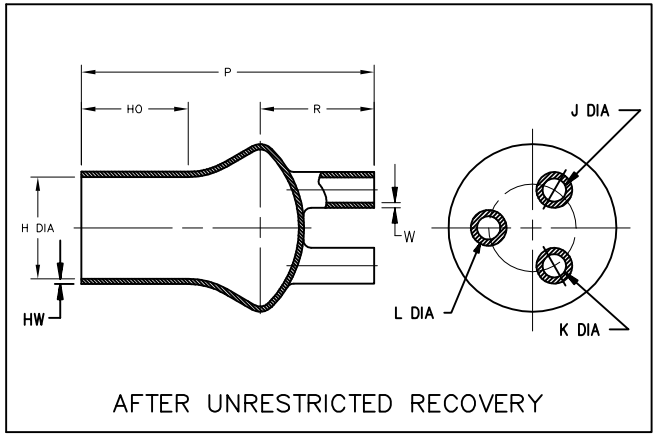

AFTER UNRESTRICTED RECOVERY

TABLE OF DIMENSIONS

PART DESCRIPTION	H MIN a	H MAX b	J MIN a	J MAX b	K MIN a	K MAX b	L MIN a	L MAX b	P ±10% b	R ±10% b	HO ±10% b	W ±20% b	HW ±20% b	WEIGHT REF b
403A016-X-04	2.42 [61,5]	1.74 [44,2]	.97 [24,6]	.41 [10,4]	1.25 [31,7]	.41 [10,4]	.72 [18,3]	.41 [10,4]	4.75 [120,7]	1.85 [47,0]	1.70 [43,2]	.10 [2,54]	.08 [2,03]	.131 [59,4]

NOTES:

1. ALL DIMENSIONS ARE IN INCHES / MILIMETERS lbs / [gms]

2. DIMENSIONS APPEARING IN TABLE ARE AS FOLLOWS:
   a – AS SUPPLIED
   b – AFTER UNRESTRICTED RECOVERY

3. WEIGHT SHOWN IN TABLE OF DIMENSIONS IS BASED ON POLYOLEFIN PART.

4. ORDERING INFORMATION:

403A016 – BASE PART NUMBER
–XX – MATERIAL DASH NUMBER
  –3 POLYOLEFIN, SEMI-RIGID, RT-301
  –4 POLYOLEFIN, FLEXIBLE, RT-1304
  –25 ELASTOMER, FLUID RESISTANT, RT-1325
–04 – MODIFICATION NUMBER

If this document is printed it becomes uncontrolled. Check for the latest revision

CUSTOMER DRAWING

UNLESS OTHERWISE SPECIFIED DIMENSIONS ARE INCHES. METRIC DIMENSIONS ARE IN BRACKETS.
DECIMAL TOLERANCES
.XXX ± 0.005 [0.13 mm]
.XX ± 0.01 [0.25 mm]
.X ± 0.1 [0.50 mm]
ANGLE TOLERANCE
.X ± 1 DEG.

TYCO ELECTRONICS RESERVES THE RIGHT TO AMEND THIS DRAWING AT ANY TIME. USERS SHOULD EVALUATE THE SUITABILITY OF THE PRODUCT FOR THEIR APPLICATION.

DRAWN: UNGUYEN | DATE: 08/26/2008
RPN: N/A
THIRD ANGLE PROJECTION

Tyco Electronics
Raychem Molded Parts
305 Constitution Dr
Menlo Park, CA 94025

TITLE: COVER, CONDUIT

SIZE: B | CODE IDENT. NO.: 06090 | DWG. NO.: 403A016-X-04

© 2003-2008 Tyco Electronics Corporation. All rights reserved.

DO NOT SCALE THIS DRAWING | SHEET 1 OF 1