AMP* "1210" Pneumatic Crimping Head 314656-1 (Used with AMP "1210" Pneumatic Tooling Assemblies Nos. 314281, 314590, and 314700)

TYPICAL TOOL HOLDERS FOR PNEUMATIC HAND TOOLS

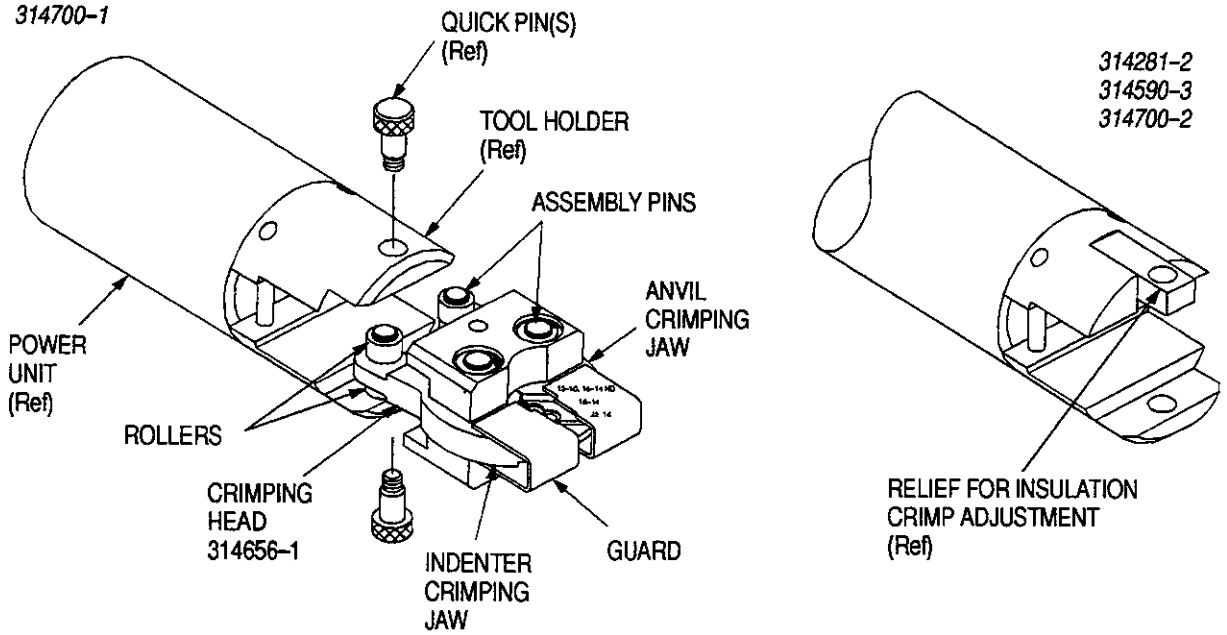

TOOLING APPLICATIONS	
CRIMPING HEAD	**PNEUMATIC TOOL**
314656-1, Rev. C●	314281-1 314590-1 and -2 314700-1
314656-1, Rev. D	314281-1 and -2 314590-1, -2, and -3 314700-1 and -2

● Rev. C crimping head can be changed to a Rev. D crimping head by AMP Service Products Business. Call the Technical Assistance Center number below.

Figure 1

1. INTRODUCTION

AMP Pneumatic Crimping Head 314656-1 is designed to crimp AMP SOLISTRAND* terminals and splices on solid or stranded copper wire 22-10 AWG. The crimping head is used with AMP "1210" Pneumatic Tooling Assemblies. The chart in Figure 1 lists the applicable pneumatic tools for each crimping head. Note that there are two versions of crimping head 314656-1; a revision C and a revision D. These crimping heads are identical except that the revision D head contains shims (items 12 through 15 shown in the parts list of Figure 8) to obtain the necessary clearance for installation in pneumatic tools 314281-2, 314590-3, and 314700-2. The revision C head can be changed to a revision D head by AMP Service Products Business, if required. Contact the Technical Assistance Center at the number listed below.

This instruction sheet provides recommended procedures for wire preparation, crimp head installation, crimping procedures, and maintenance and inspection. For information concerning tool setup and operation, refer to the instruction sheet packaged with the appropriate tool, 408-9512, 408-9639, and 408-9705. Details on product specifications and part number information are available in AMP Catalog 82042.

Read these instructions thoroughly before proceeding.

NOTE *Measurements are in metric units [followed by U.S. customary units in brackets].*

Reasons for reissue are provided in Section 8, REVISION SUMMARY.

This AMP controlled document is subject to change. For latest revision call the AMP FAX number.
©Copyright 1994 by AMP Incorporated. All Rights Reserved.
*Trademark

2. DESCRIPTION

The pneumatic crimping head consists of integral jaws which close in an arc-like motion. After an operator locates the terminal or splice between the crimping jaws and inserts the stripped wire, the tool is activated to crimp the terminal or splice to the wire.

3. HEAD INSTALLATION AND REMOVAL

3.1. Installation

NOTE *Certain precautions should be taken by the operator to avoid personal injury or damage to the tool. Refer to the instructions packaged with the tooling assembly for operation and safety precautions.*

DANGER *To avoid personal injury, ALWAYS disconnect tool from air supply before installing crimping head.*

1. Insert crimping head between the ears on the tool holder of the power unit. See Figure 1.

2. After crimping head is properly aligned, insert and tighten the quick pins provided with the tooling assembly.

3. Connect tool to an adequate air supply between 620- 690 kPa [90-100 psi]. For specific information on air line requirements and air hose installation, refer to the instructions packaged with the appropriate tool.

3.2. Removal

DANGER *To avoid personal injury, disconnect tool from air supply.*

Remove quick pins from the tool; then remove crimping head from the tool holder.

4. CRIMPING PROCEDURES (Figures 3, 4, and 5)

DANGER *To avoid personal injury, always keep fingers clear of crimping jaws when operating the tool.*

1. Strip wire to the proper dimension shown in Figure 2. DO NOT nick the wire strand or use wires with nicked or missing conductor strands.

2. Open crimping jaws by squeezing the rollers simultaneously; then place the terminal or splice into the center of the appropriate crimping chamber. The crimping head has three crimping chambers: 12-10 AWG or 16-14 HD AWG, 16-14 AWG, and 22-16 AWG. Use the correct crimp chamber for the specific wire size. Refer to Figures 3, 4, and 5.

NOTE *If brazed seam on terminal or splice is visible, position the seam toward "W" shaped jaw.*

3. After terminal or splice is properly positioned, release rollers to allow the jaws to spring shut, securing terminal or splice within the jaws.

4. Insert stripped wire, as shown in Figures 3, 4, and 5. Activate the tool to complete the crimp.

CAUTION *Do not allow wire insulation to enter terminal or splice wire barrel.*

5. Open crimping jaws by squeezing the rollers simultaneously; then remove crimped terminal or splice.

NOTE *When crimping the uncrimped half of a butt splice, reposition it in the crimping jaws and follow the procedures in Steps 2 through 5. If the splice cannot be turned, rotate the tool head. See Figure 5.*

CRIMPING HEAD	WIRE RANGE (AWG)	WIRE STRIP LENGTH mm [IN.]							
		TERMINAL (STD)		TERMINAL (LG BARREL)		BUTT SPLICE		PARALLEL SPLICE	
		MIN	MAX	MIN	MAX	MIN	MAX	MIN	MAX
314656-1	22 – 16	4.37 [.172]	5.16 [.203]	6.35 [.250]	7.14 [.281]	6.35 [.250]	7.14 [.281]	7.95 [.313]	8.74 [.344]
	16 – 14	4.37 [.172]	5.16 [.203]	6.35 [.250]	7.14 [.281]	6.35 [.250]	7.14 [.281]	7.95 [.313]	8.74 [.344]
	12 – 10 16 – 14 HD	6.35 [.250]	7.14 [.281]	—	—	6.35 [.250]	7.14 [.281]	7.95 [.313]	8.74 [.344]

NOTE: Refer to AMP Catalog No. 82042 for product part numbers.

Figure 2

CRIMPING A SOLISTRAND TERMINAL

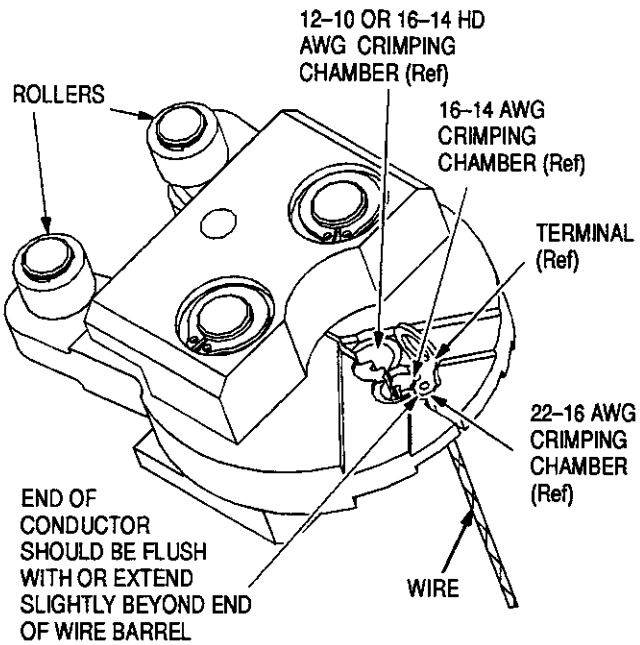

NOTE: CRIMPING HEAD SHOWN WITHOUT GUARD FOR CLARITY.

Figure 3

CRIMPING A PARALLEL SPLICE

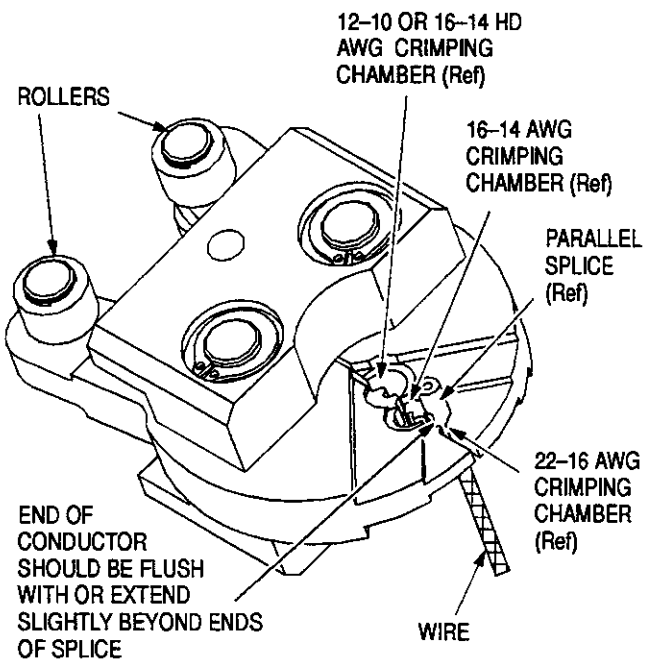

NOTE: CRIMPING HEAD SHOWN WITHOUT GUARD FOR CLARITY.

Figure 4

CRIMPING A BUTT SPLICE

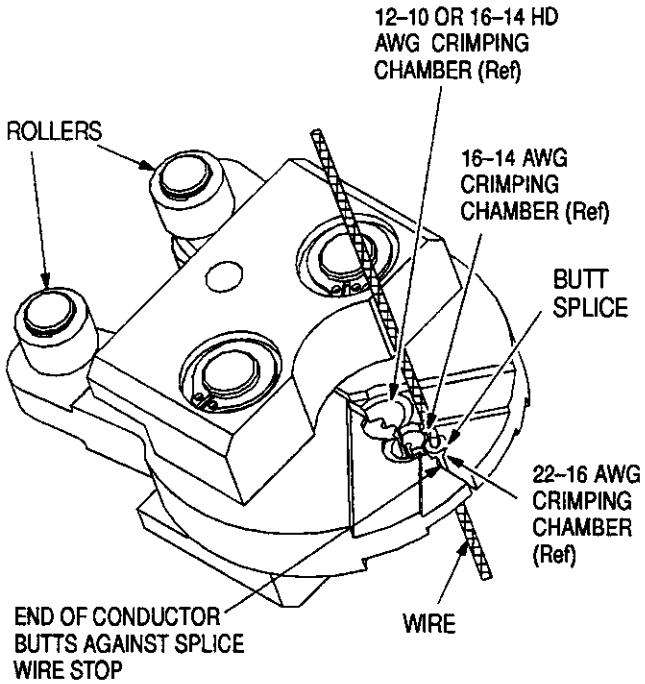

NOTE: CRIMPING HEAD SHOWN WITHOUT GUARD FOR CLARITY.

Figure 5

5. CRIMP INSPECTION

Inspect crimped terminals and splices by checking the features described in Figure 6. Use only the terminals or splices that meet the conditions shown in the "ACCEPT" column. "REJECT" terminations can be avoided through careful use of instructions in Section 4, and by performing regular head maintenance, as described in Section 6.

6. MAINTENANCE AND INSPECTION

DANGER *To avoid personal injury, disconnect tool from air supply before performing any maintenance, inspection, or repairs.*

AMP recommends that a maintenance and inspection program be performed periodically to ensure dependable and uniform terminations. Heads should be inspected once a month. Frequency of inspection should be adjusted to suit your requirements through experience and is dependent upon:

1. The care, amount of use, and handling of the head.
2. The type and size of the products crimped.
3. The degree of operator skill.
4. The presence of abnormal amounts of dust and dirt.
5. Your own established standards.

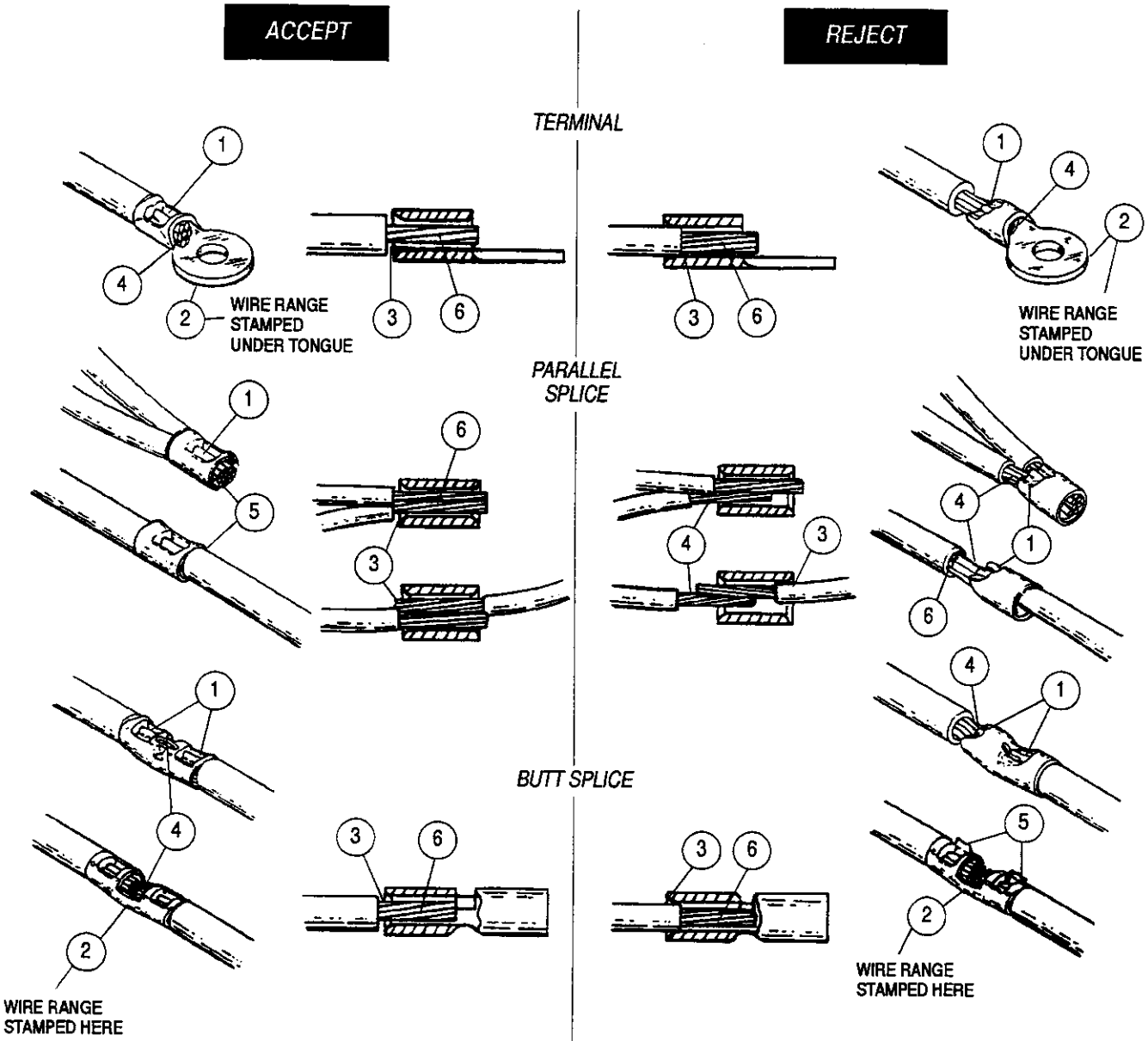

1. Crimps centered. Crimps may be off center BUT NOT OFF END OF WIRE BARREL.
2. AWG wire size being used matches wire range stamped on terminal or splice and tool.
3. Wire insulation does not enter wire barrel.
4. Conductor is visible through inspection hole of butt splice. Conductor is flush with or extends slightly beyond end of terminal wire barrel.
5. On parallel splices, conductor ends must be flush with or extend slightly beyond end of barrel.
6. No nicked or missing conductor strands.

1. Crimped off end of splice or terminal wire barrel.
2. AWG wire size being used does not match wire range stamped on terminal or splice and tool.
3. Wire insulation entered barrel of terminal or splice.
4. Conductor not inserted far enough in terminal or splice. End of conductor must be visible through inspection hole of butt splices, and be flush with or extend beyond end of terminal wire barrel or parallel splice.
5. Excessive "flash" on terminal or splice indicates wrong wire, splice, terminal or tooling combination was used, or damaged dies.
6. Nicked or missing conductor strands.

Figure 6

90-161

Each crimping head is thoroughly inspected before packaging. Since there is the possibility of head damage in shipment, new crimping heads should be inspected according to Section 6.

DANGER *To avoid personal injury, disconnect air supply for all maintenance and inspection procedures.*

6.1. Daily Maintenance

AMP recommends that each operator be responsible for the following steps of daily maintenance:

1. Remove dust, moisture, and other contaminants with a clean, soft brush, or a lint-free cloth. Do NOT use objects that could damage the heads.

NOTE *Crimping heads are coated with a preservative to prevent rust and corrosion. Wipe any excess preservative from the head, particularly from crimping surfaces.*

2. Make sure that all pins, rings, and other components are in place and secure.

3. Make certain all surfaces are protected with a thin coat of any good SAE No. 20 motor oil. Do NOT oil excessively.

4. When the head assembly is not in use, store it in a clean dry, area.

6.2. Periodic Inspection

Regular inspections should be performed by quality control personnel. A record of scheduled inspections should remain with the crimping heads or be supplied to supervisory personnel responsible for the crimping heads. Though recommendations call for at least one inspection a month, the frequency should be based on amount of use, working conditions, operator training and skill, and your established company policies. These inspections should include a visual inspection (Paragraph 6.3, Visual Inspection) and a crimping chamber inspection (Paragraph 6.5, Gaging the Crimping Chamber).

6.3. Visual Inspection

1. Inspect the head for missing pins and retaining rings. If parts are missing or defective, replace them by referring to Figure 8.

2. Check all bearing surfaces for wear. Make sure the rollers turn freely with minimal resistance. Replace any worn parts.

3. Inspect the crimp area for flattened, chipped, or broken areas. Although the crimping chambers may gage within permissible limits, worn or damaged die closure surfaces are objectionable and will affect the quality of the crimp.

† Trademark of Dow Corning Corporation

6.4. Lubrication

Lubricate all pins, pivot points, and bearing surfaces with a high quality grease. AMP recommends the use of Molykote† paste, which is a commercially available lubricant. Lubricate according to the following schedule:

Head used in daily production - lubricate daily
Head used daily (occasional) - lubricate weekly
Head used weekly - lubricate monthly

Wipe excess grease from crimping head, particularly from die closure areas. Grease transferred from the die closure area onto certain terminations may affect the electrical characteristics of a termination.

6.5. Gaging the Crimping Chamber

Every crimping head is inspected for proper jaw closure before packaging. An inspection should be performed periodically to check the jaw closure for excessive wear. The jaw closure inspection is accomplished using the plug gage. AMP neither manufactures or sells plug gages. A suggested plug gage design and the GO/NO-GO dimensions of the plug gage elements are listed in Figure 7. The following procedure is recommended for inspecting the die closure area.

DANGER *To avoid personal injury, disconnect air supply and remove crimping head from tool. Refer to Section 3, HEAD INSTALLATION AND REMOVAL.*

1. Remove oil and dirt from the bottom of the jaw surfaces, die closure surfaces, and plug gage element surfaces.

2. With the crimping jaws bottomed, measure the jaw closure area using the proper plug gage element. Proceed as follows:

   a. Align the GO element with the crimping chamber. Push the GO element straight into the crimping chamber without using force. The GO element must pass completely through the crimping chamber.

   b. Align the NO-GO element with the crimping chamber; then try to insert it straight into the crimping chamber. The NO-GO element may start entry but must not pass completely through.

3. If the jaw closure meets the plug gage conditions, the crimping head is considered dimensionally correct and should be lubricated with a THIN coat of any good SAE No. 20 motor oil. If the crimping chambers do not conform to the plug gage conditions provided in Figure 7, contact your local AMP Field Service Engineer, or refer to Section 7, REPLACEMENT AND REPAIR.

For additional information about the use of a plug gage, see AMP instruction sheet 408-7424.

SUGGESTED PLUG GAGE DESIGN

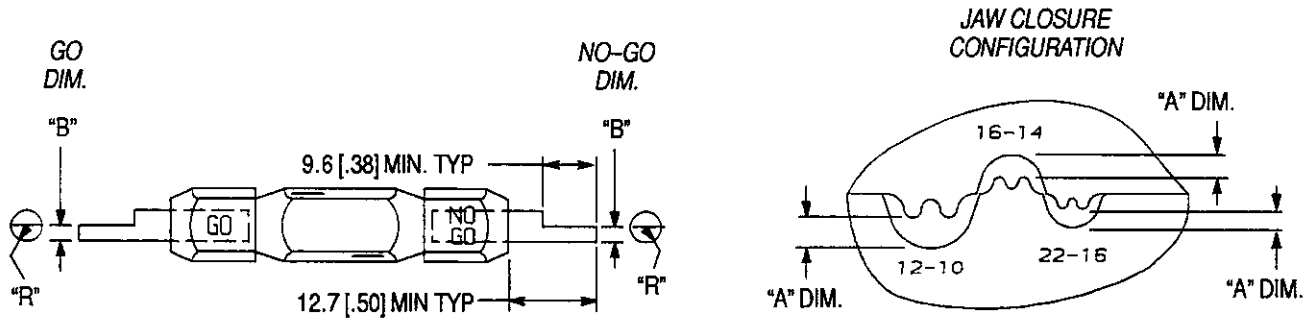

CRIMPING HEAD NUMBER	WIRE RANGE (AWG)	JAW CLOSURE DIM'S "A"		GAGE ELEMENT DIM'S "B"		RADIUS "R"
		GO	NO-GO	GO	NO-GO	
314656-1	22 – 16	1.168 [.0460]	1.320 [.0520]	1.168 – 1.176 [.0460 – .0463]	1.318 – 1.320 [.0519 – .0520]	1.57 [.062]
	16 – 14	1.372 [.0540]	1.524 [.0600]	1.372 – 1.379 [.0540 – .0543]	1.521 – 1.524 [.0599 – .0600]	1.57 [.062]
	12 – 10 16 – 14 HD	1.930 [.0760]	2.082 [.0820]	1.930 – 1.938 [.0760 – .0763]	2.080 – 2.082 [.0819 – .0820]	2.36 [.093]

Figure 7

7. REPLACEMENT AND REPAIR

Replacement parts and recommended spares are listed in Figure 8. The recommended spares should be stocked for immediate replacement. Replacement parts can be ordered from:

CUSTOMER SERVICE (38-35)
AMP INCORPORATED
P.O. BOX 3608
HARRISBURG, PA 17105-3608

For further repair and replacement information, call the AMP Technical Assistance Center at 1-800-722-1111.

When repair is necessary, return the crimping head (along with a written description of the problem) to:

CUSTOMER REPAIR (01-12)
AMP INCORPORATED
1523 NORTH 4TH STREET
HARRISBURG, PA 17102-1604

8. REVISION SUMMARY

Since the previous release, the following changes and additions were made to this document:

Per EC 0150-3264-94:

- Changed Figure 1 to show applicability of Crimping Head 314656-1 revisions C and D
- Added items 12 through 15 in Figure 8 to show additional parts for revision D crimping head
- Added .178 [.007] Gap Max. to Figure 8

Per EC 0990-0252-93:

- Updated format

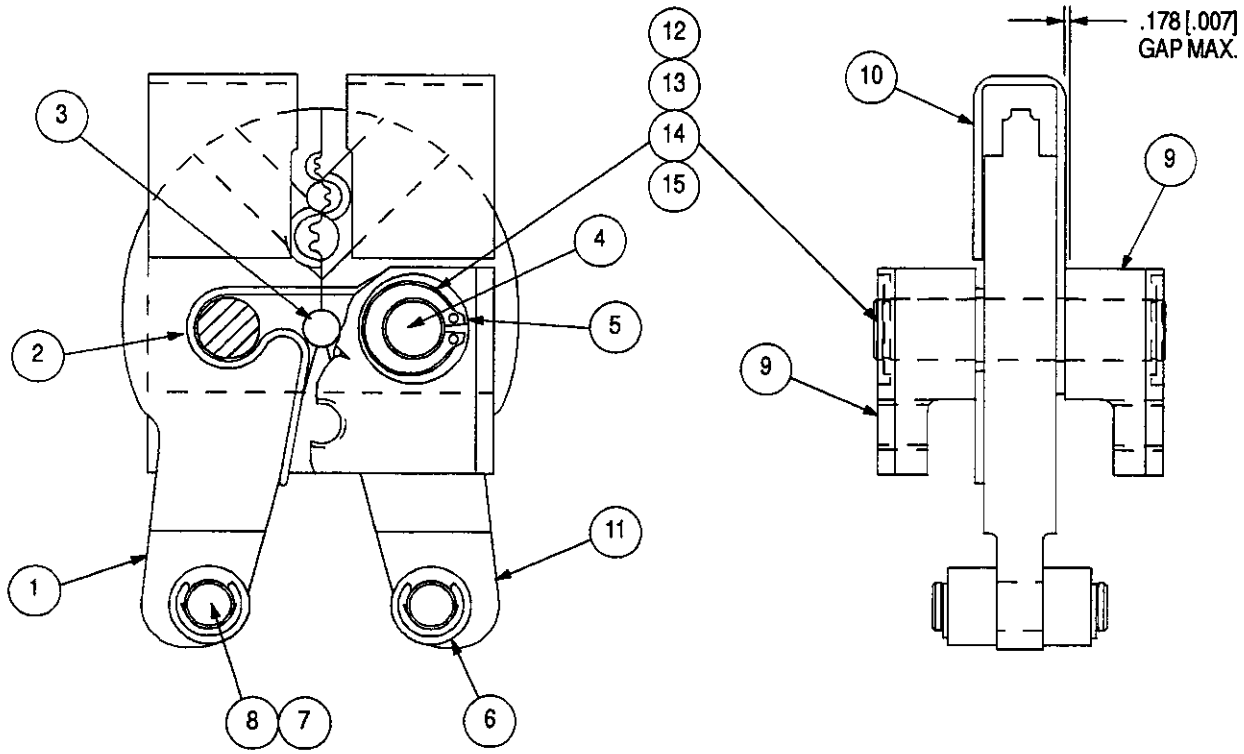

TOOLING	ITEM	PART NUMBER	DESCRIPTION	QTY
314656-1	1	47858	JAW, Crimping, Anvil	1
	2 ††	314253-2	SPRING	1
	3	38385	PIN, Pivot .1875 Dia.	1
	4	6-23629-0	PIN, Str., Grv .3125 Dia. x 1.488	2
	5	1-21048-0	RING, Retaining	4
	6 ††	314479-2	ROLLER	4
	7 ††	3-23620-3	PIN, Str., Grv .2500 Dia.	2
	8 ††	21045-6	RING, Retaining	4
	9	314657-1	LINK	2
	10	314658-1	GUARD	1
	11	47859	JAW, Crimping, Indenter	1
	12 ■	301185-6	SHIM, .20 [.008] Thick	AR■■
	13 ■	301185-7	SHIM, .25 [.010] Thick	AR■■
	14 ■	301185-8	SHIM, .30 [.012] Thick	AR■■
	15 ■	301185-9	SHIM, .38 [.015] Thick	AR■■

†† Recommended Customer Spares
■ For Revision D Crimping Heads Only
■■ As Required

Figure 8