THIS DRAWING IS UNPUBLISHED. RELEASED FOR PUBLICATION -,- .
© 2016 Commscope, INC. Confidential
NOTICE: These drawings and specifications are the proprietary property of COMMSCOPE, INC. and may be used only for the specific purpose authorized in writing by COMMSCOPE, INC.

LOC	DIST
HM	00

REVISIONS

P	LTR	DESCRIPTION	DATE	DWN	APVD
	P	REV-EC 0340-0004-04	24FEB04	LH	AK
	R	REV ECO-06-026329	19JAN07	LH	NJ
	T	ECN8000019699 REBRANDING	31JAN2017	JUM	ARL

1. ALL DIMENSIONS SHOWN ARE MAXIMUM UNLESS OTHERWISE SPECIFIED.

2. MATERIAL:
HOUSINGS – POLYCARBONATE, FLAME RETARDANT, CLEAR.
TERMINALS – TIN PLATED PHOS BRONZE.

3. WIRE RANGE: 19–26 AWG SOLID COPPER CONDUCTORS.

4. TEL-SPLICE ASSEMBLIES WITHOUT SEALANT (UNFILLED) SHALL BE YELLOW.

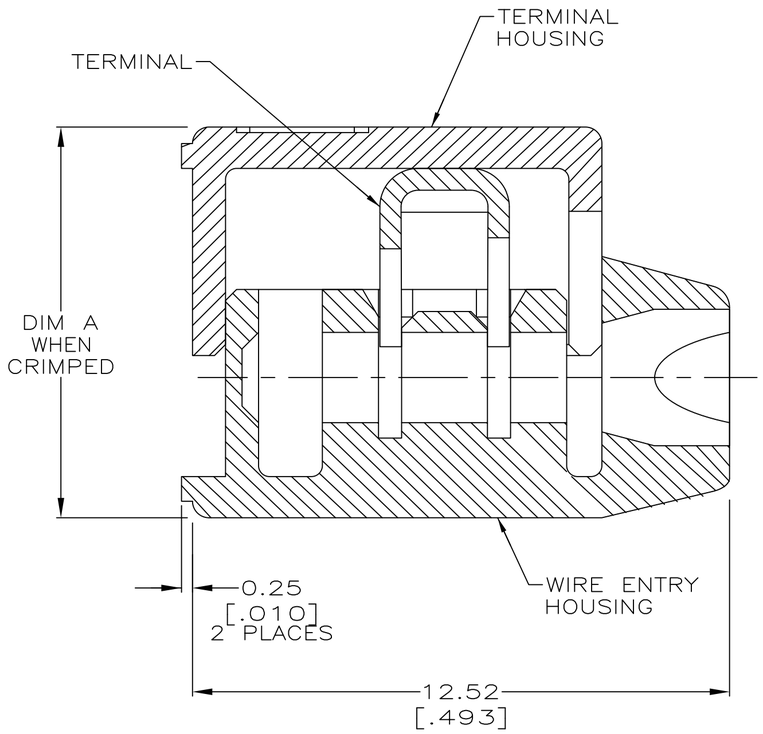

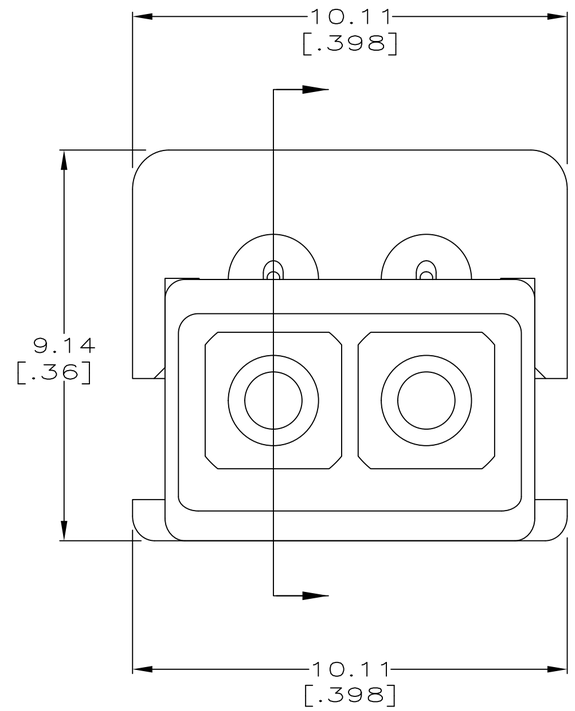

DIM A	WIRE AWG
6.65[.262]	24–26
7.01[.276]	19–22

PACKAGED	DESCRIPTION	PART NUMBER
100/BOX	FILLED	1–553395–2
100/BOX	UNFILLED 4	1–553395–1
1000/BOX	FILLED	553395–3
BULK	UNFILLED 4	553395–2

THIS DRAWING IS A CONTROLLED DOCUMENT.

DIMENSIONS: mm [INCHES]

TOLERANCES UNLESS OTHERWISE SPECIFIED:
0 PLC ± –
1 PLC ± –
2 PLC ± –
3 PLC ± –
4 PLC ± –
ANGLES ± –
1

MATERIAL – 2
FINISH – 2

DWN G. GARRETH 04OCT2002
CHK L. SMITH 29AUG2002
APVD A. KINKA 29AUG2002
PRODUCT SPEC —
APPLICATION SPEC —
WEIGHT —

COMMSCOPE, INC.

NAME TEL-SPLICE ASSEMBLY, 2 WIRE, FLAME RETARANT

SIZE A2 | CAGE CODE – | DRAWING NO C-553395 | RESTRICTED TO —

CUSTOMER DRAWING | SCALE 10:1 | SHEET 1 OF 1 | REV T

553395