THIS DRAWING IS UNPUBLISHED. RELEASED FOR PUBLICATION -,- .
© COPYRIGHT - By - ALL RIGHTS RESERVED.

LOC	DIST
AD	25

REVISIONS

P	LTR	DESCRIPTION	DATE	DWN	APVD
	A	RELEASE PER ECO-12-002590	20FEB2012	WS	RP

1. HOUSING MATERIAL: GLASS-FILLED POLYMER.
2. CONTACT MATERIAL: COPPER ALLOY.
3. CONTACT FINISH: DIN 41612 CLASS 2 IN CONTACT AREA. TIN PLATE ON TAILS.
4. CONTACT POINT.
5. ACTION PIN POSTS REQUIRE 1.57[.062] MIN THICK PC BOARD. RECOMMENDED PC BOARD HOLES ARE Ø1.151±0.2[.0453±.001] DRILLED HOLE WITH 0.2-0.07[.001-.003] COPPER AND 0.008[.0003] MIN TIN-LEAD PLATING. FINISHED HOLE AFTER PLATING, Ø0.94-1.09[.037-.043].
6. CENTER ROW OF PLATED THRU HOLES NOT REQUIRED FOR THIS CONNECTOR LOAD PATTERN.
7. PART NUMBER, DATE CODE IDENTIFICATION, CSA LOGO IN THIS APPROXIMATE AREA, ON REVERSE SIDE.
8. OBSOLETE PARTS: OBSOLETE CIS STREAMLINING PER D.RENAUD/D.SINISI

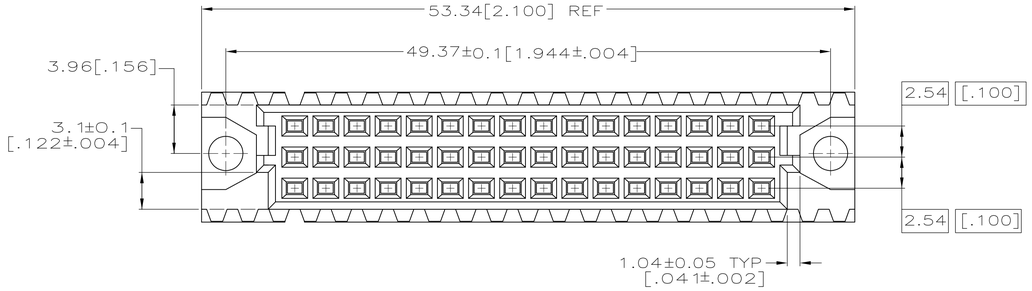

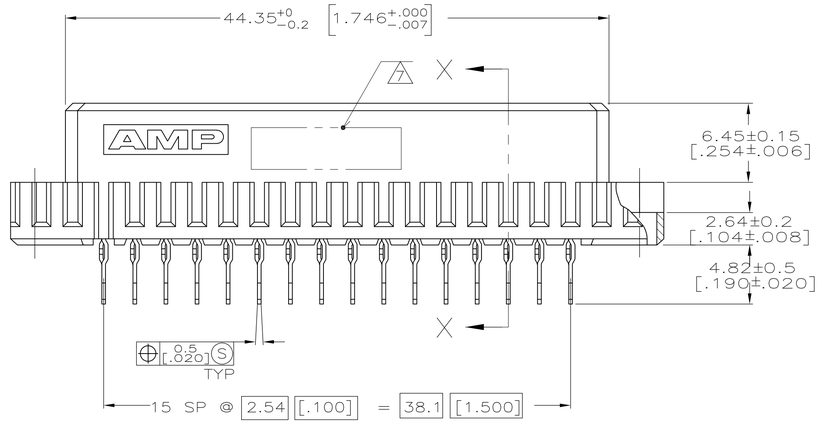

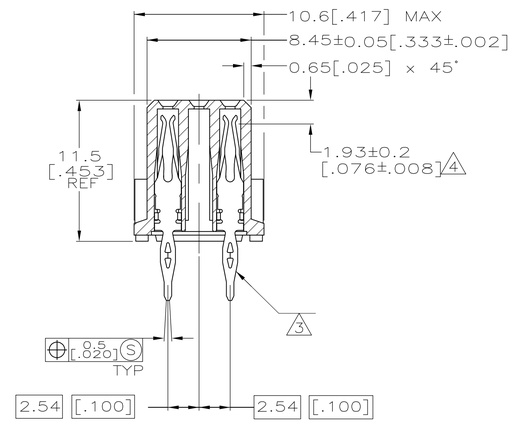

SECTION X-X

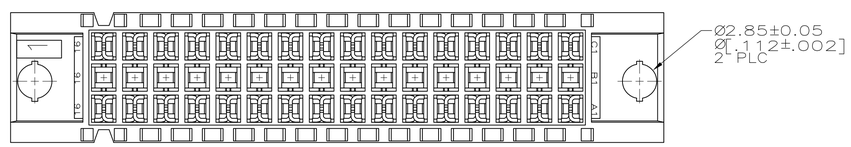

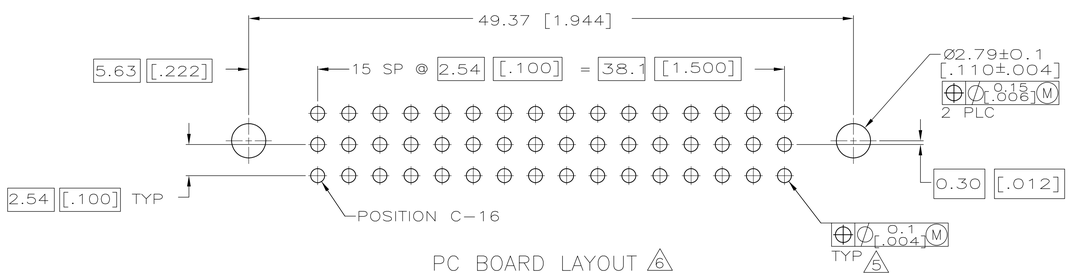

PC BOARD LAYOUT 6

8 OBSOLETE	3	1 THRU 16	X	-	X	32	5535068-5
	3	1 THRU 16	X	-	X	32	5535068-4
NOTES		POSITIONS LOADED	ROWS LOADED			NO. OF LOADED POSITION	ASSY PART NUMBER
			C	B	A		

THIS DRAWING IS A CONTROLLED DOCUMENT.

DIMENSIONS: mm [INCHES]

TOLERANCES UNLESS OTHERWISE SPECIFIED:
0 PLC ± -
1 PLC ± -
2 PLC ± 0.13[.005]
3 PLC ± -
4 PLC ± -
ANGLES ± -

MATERIAL 1 2

FINISH 3

DWN J. POLIGNONE 03JUN05
CHK A. SHARPE 03JUN05
APVD A. SHARPE 03JUN05
PRODUCT SPEC —
APPLICATION SPEC —
WEIGHT —

CUSTOMER DRAWING

TE Connectivity

PRELIMINARY

NAME ASSEMBLY, RECEPTACLE, EUROCARD, 1/2C. A and C, 32/48 POSITION, 4.83[.190] TOOLLESS, PRESS-FIT,

SIZE	CAGE CODE	DRAWING NO	RESTRICTED TO
A1	00779	C-5535068	—

SCALE	SHEET	REV
4:1	1 OF 1	A

4805 (3/11)