THIS DRAWING IS UNPUBLISHED. RELEASED FOR PUBLICATION -,- .
© COPYRIGHT - BY TYCO ELECTRONICS CORPORATION. ALL RIGHTS RESERVED.

LOC	DIST
GP	00

REVISIONS

P	LTR	DESCRIPTION	DATE	DWN	APVD
	B	REVISED PER ECO-08-007327	22JUL08	BM	WM

1. THE CONTACT SURFACES OF THE TERMINALS ARE COATED WITH LUBRICANT.

2. ALL DIMENSIONS SHOWN ARE FOR REFERENCE ONLY UNLESS OTHERWISE SPECIFIED.

3. MATERIAL: HOUSING – THERMOPLASTIC, BLACK.
TERMINAL – PHOS BRONZE PLATED WITH EITHER .000030 MINIMUM GOLD PLATE OR GOLD FLASH OVER PALLADIUM NICKEL PLATE, .000030 MINIMUM TOTAL ON MATING SURFACE. .000120 MINIMUM TIN PLATE ON TAILS OVER .000050 MINIMUM NICKEL UNDERPLATE OVER ENTIRE TERMINAL.

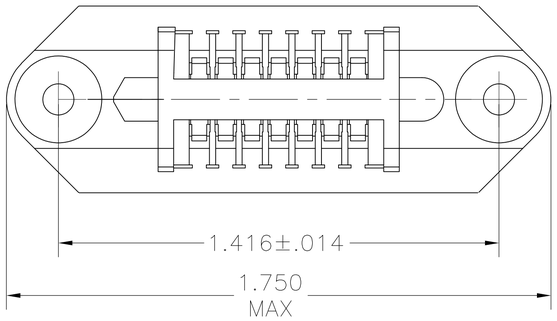

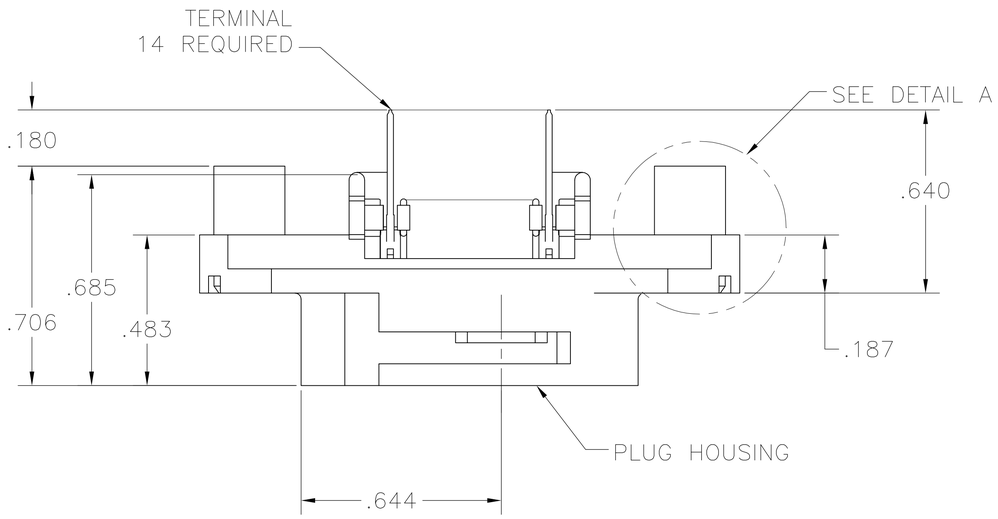

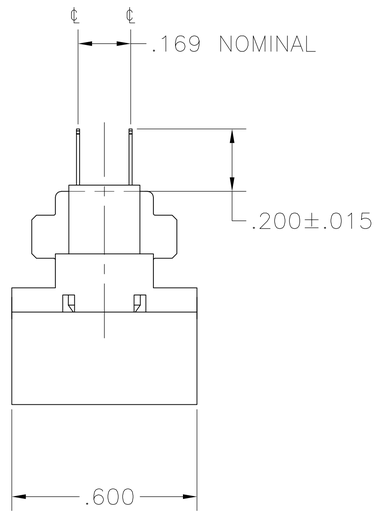

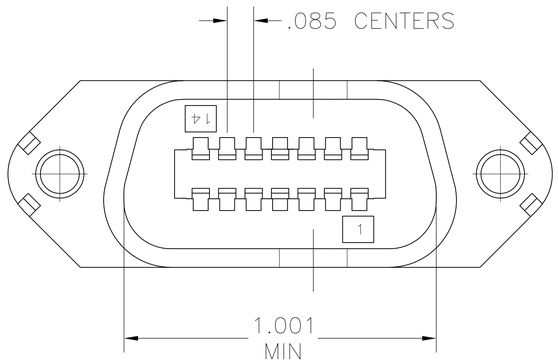

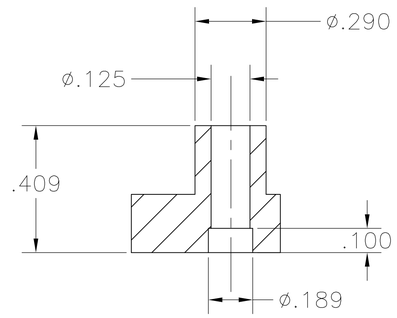

DETAIL A
BOTH ENDS

5552209-1
PART NUMBER

THIS DRAWING IS A CONTROLLED DOCUMENT.

DIMENSIONS: INCHES

TOLERANCES UNLESS OTHERWISE SPECIFIED:
0 PLC ± –
1 PLC ± –
2 PLC ± –
3 PLC ± –
4 PLC ± –
ANGLES ± –

MATERIAL 3
FINISH 3

DWN B. LATTUCA 16AUG05
CHK W. MILLHIMES 16AUG05
APVD M. WALMSLEY 16AUG05
PRODUCT SPEC –
APPLICATION SPEC –
WEIGHT –

Tyco Electronics
Tyco Electronics Corporation
Harrisburg, PA 17105-3608

NAME PLUG ASSY,14 POSN,VERT MTG, W/ STANDOFF, CHAMP-LOK –

SIZE	CAGE CODE	DRAWING NO	RESTRICTED TO
A1	00779	C-5552209	–

CUSTOMER DRAWING
SCALE 4:1 SHEET 1 OF 1 REV B