THIS DRAWING IS UNPUBLISHED. RELEASED FOR PUBLICATION -,- .
© COPYRIGHT - BY TYCO ELECTRONICS CORPORATION. ALL RIGHTS RESERVED.

LOC	DIST
GP	00

REVISIONS

P	LTR	DESCRIPTION	DATE	DWN	APVD
	B	REVISED PER ECO-08-007327	17APR08	BM	WM

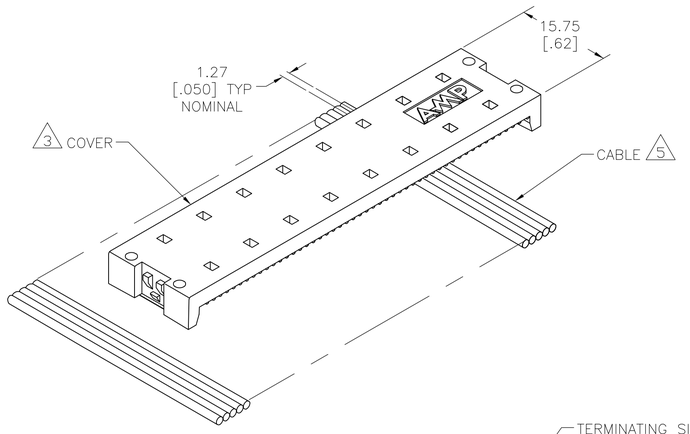

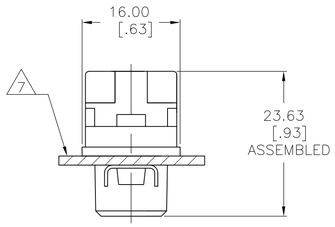

END VIEW

1. THE CONTACT SURFACES OF THE TERMINALS ARE COATED WITH LUBRICANT.

2. MATERIAL:
HOUSING & COVER: PLYPHENYLENE OXIDE (BLACK).
TERMINALS: PHOS BRONZE PLATED WITH EITHER 0.76μm [.000030] MINIMUM GOLD PLATE OR GOLD FLASH OVER PALLADIUM NICKEL PLATE, 0.76μm [.000030] MIN TOTAL ON MATING SURFACE. GOLD FLASH PLATED ON TERMINATING SIDE. 1.27μm [.000050] MINIMUM NICKEL UNDERPLATE OVER ENTIRE TERMINAL.
EMI SHIELD: NICKEL PLATED DIE CASTING.
STUD RECEIVER: STAINLESS STEEL.

3. COVER SHOWN LOOSE BUT SHIPPED ASSEMBLED.

4. WIRE RANGE: 26 AWG SOLID THRU 30 AWG SOLID AND 28 AWG STRANDED RIBBON CABLE.

5. FLAT CABLE SHALL BE FURNISHED BY CUSTOMER.

6. MATING FACE CONSISTS OF TWO ROWS OF TERMINALS ON 2.16 [.085] CENTERS. TERMINATING SIDE CONSISTS OF TERMINALS ON 2.54 [.100] CENTERS FOR AN EFFECTIVE 1.27 [.050] TERMINATION.

7. PANEL THICKNESS RANGE: 1.58 [.062] MAX.

8. HOLES TO BE TAPPED AFTER PLATING.

9. ALL DIMENSIONS SHOWN ARE MAXIMUM UNLESS OTHERWISE SPECIFIED.

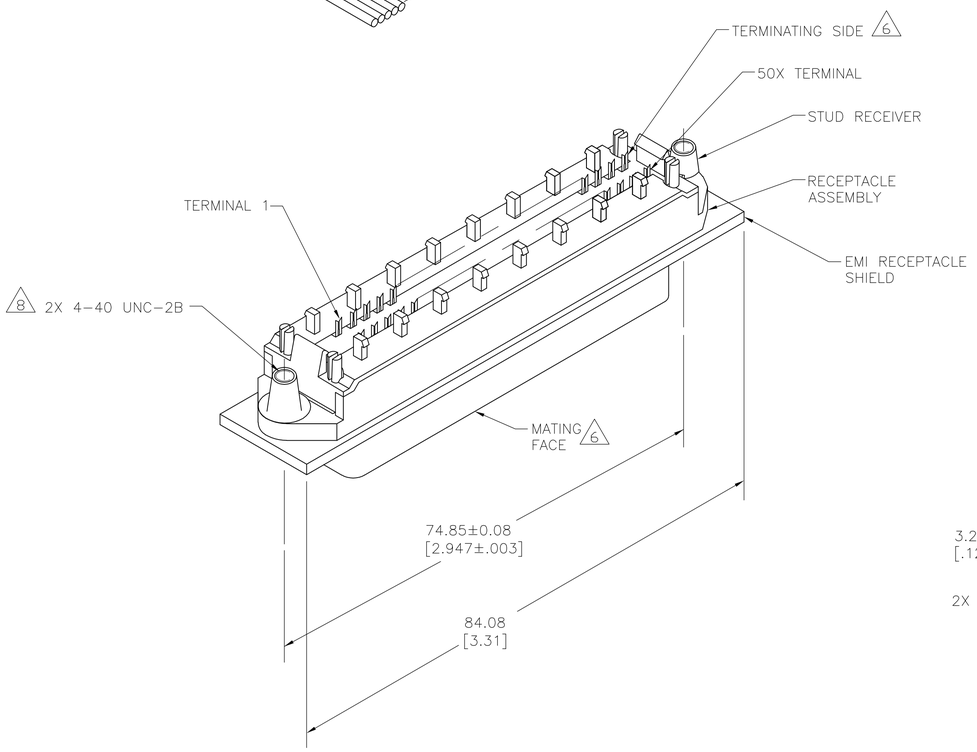

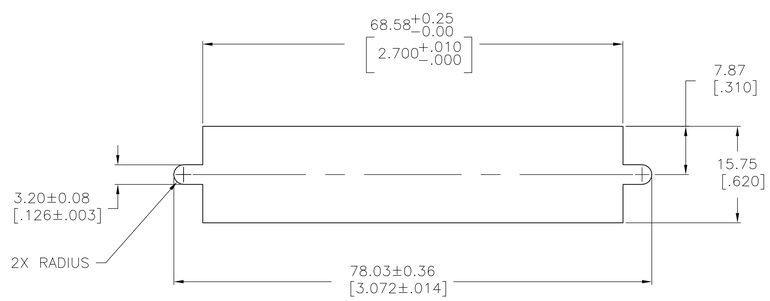

SUGGESTED PANEL CUTOUT
FOR SCREWLOCK FEATURE 7

5554436-2
PART NUMBER

THIS DRAWING IS A CONTROLLED DOCUMENT.

DIMENSIONS: mm [INCHES]

TOLERANCES UNLESS OTHERWISE SPECIFIED:
0 PLC ± –
1 PLC ± –
2 PLC ± –
3 PLC ± –
4 PLC ± –
ANGLES ± –
9

MATERIAL 2
FINISH 2

DWN B. MCMASTER 110CT05
CHK W. MILLHIMES 110CT05
APVD W. MILLHIMES 110CT05
PRODUCT SPEC —
APPLICATION SPEC —
WEIGHT —

Tyco Electronics
Tyco Electronics Corporation
Harrisburg, PA 17105-3608

NAME
EMI RECEPTACLE ASSEMBLY,
50 POSITION, LOW PROFILE, SHIELDED,
SCREW LOCK, CHAMP LATCH

SIZE	CAGE CODE	DRAWING NO	RESTRICTED TO
A1	00779	C-5554436	—

CUSTOMER DRAWING | SCALE 2:1 | SHEET 1 OF 1 | REV B