THIS DRAWING IS UNPUBLISHED. RELEASED FOR PUBLICATION -.- .
© COPYRIGHT - BY TYCO ELECTRONICS CORPORATION. ALL RIGHTS RESERVED.

LOC	DIST
AD	00

REVISIONS

P	LTR	DESCRIPTION	DATE	DWN	APVD
	C	REV PER ECR-11-003871	22FEB11	RC	CW

CONNECTOR ASSEMLBY EXAMPLARY LOADED (9)

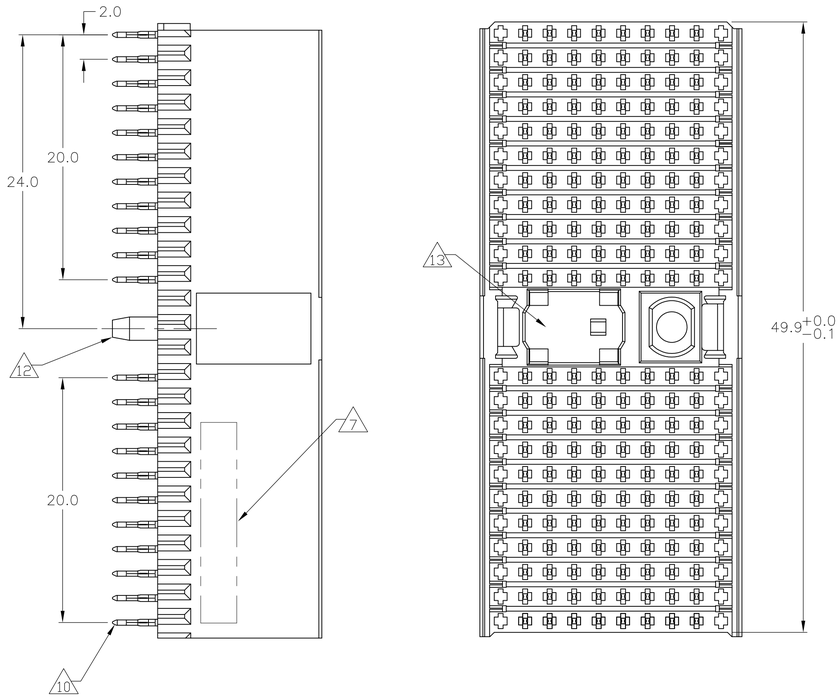

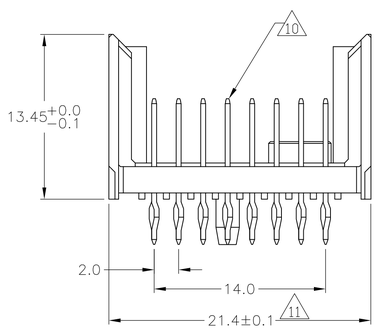

CONTACT DIMENSIONS

SCALE 5:1

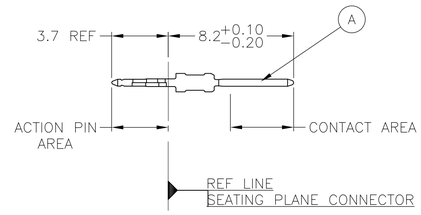

CONTACT LAYOUT

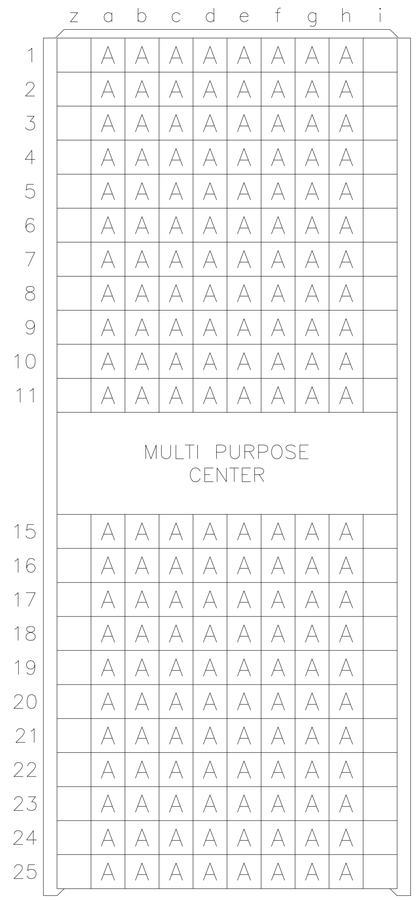

RECOMMENDED PCB-HOLE LAYOUT COMPONENT SIDE SHOWN

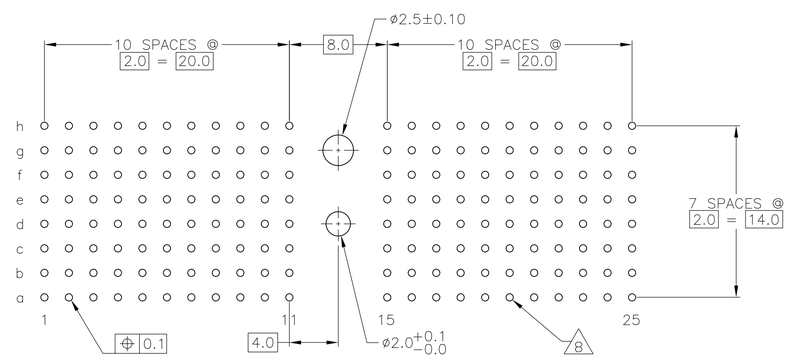

PLATED THRU HOLES PARAMETERS

REFERENCE APPLICATION SPECIFICATION

		FINISH	PART NUMBER
	(2)(3)(16)		3-5646346-0
	(2)(6)(14)		1-5646346-9
	(2)(5)(14)		5646346-9
(15) OBSOLETE	(2)(4)		~~5646346-4~~
	(2)(3)		5646346-1

THIS DRAWING IS A CONTROLLED DOCUMENT.

DIMENSIONS: mm

TOLERANCES UNLESS OTHERWISE SPECIFIED: 0 PLC ±; 1 PLC ± 0.1; 2 PLC ±; 3 PLC ±; 4 PLC ±; ANGLES ±0.2 ±1°

MATERIAL (1)

FINISH SEE TABLE

DWN	B.CARBO	07JAN05
CHK	G.SKIPPER	07JAN05
APVD	G.SKIPPER	07JAN05
PRODUCT SPEC	108-1622	
APPLICATION SPEC	114-19029	
WEIGHT	—	

Tyco Electronics — Tyco Electronics Corporation, Harrisburg, Pa 17105-3608

NAME: MALE ASSEMBLY, Z-PACK 2mm HM, TYPE D

SIZE	CAGE CODE	DRAWING NO	RESTRICTED TO
A1	00779	C-5646346	—

CUSTOMER DRAWING — SCALE 4:1 — SHEET 1 OF 2 — REV C

THIS DRAWING IS UNPUBLISHED. RELEASED FOR PUBLICATION -.- .
© COPYRIGHT - BY TYCO ELECTRONICS CORPORATION. ALL RIGHTS RESERVED.

LOC	DIST
AD	00

REVISIONS

P	LTR	DESCRIPTION	DATE	DWN	APVD
	—	SEE SHEET 1	–	—	—

1. MATERIAL:
   CONTACT: PHOSPHOR BRONZE.
   HOUSING: GLASS-FILLED POLYESTER.
2. GENERAL PLATING SPECIFICATION: UNDERPLATING (ENTIRE CONTACT): 1.27µm MIN NICKEL AND ACTION PIN: 0.5µm MIN TIN.
   FOR PLATING OF MATING SURFACES SEE APPLICABLE SPECIFICATION REFERENCE FOR EACH DASH NUMBER.
3. CONFORMS TO ALL TESTING ACCORDING TO IEC 61076-4-101 PERFORMANCE LEVEL 2.
4. CONFORMS TO ALL TESTING ACCORDING TO IEC 61076-4-101 PERFORMANCE LEVEL 1.
5. CONNECTOR TESTED AND QUALIFIED AGAINST TELCORDIA GR-1217-CORE QUALITY LEVEL 3, CENTRAL OFFICE APPLICATIONS.
6. CONNECTOR TESTED AND QUALIFIED AGAINST TELCORDIA GR-1217-CORE QUALITY LEVEL 3, UNCONTROLLED ENVIROMENT APPLICATIONS.
7. CONNECTOR MARKED WITH PART NUMBER AND DATE CODE. ADDITIONAL CHARACTERS OR MARKINGS, AS WELL AS THE LOCATION OF THE MARKINGS, MAY BE ADDED FOR TRACEABILITY BASED UPON MANUFACTURERS DISCRETION.
8. PLATED-THROUGH HOLES AT 2x2mm SQUARE GRID PATTERN DEFINED BY CONTACT LAYOUT.
9. FOR ACTUAL PIN LOADING SEE "CONTACT LAYOUT".
10. FOR ACTUAL PIN DIMENSIONS SEE "CONTACT DIMENSIONS".
11. TO BE MEASURED AT BOTTOM OF SHROUD.
12. POLARIZATION FEATURE.
13. AREA RESERVED FOR KEYING PART (BASIC P/N 100525)
14. CONNECTOR LUBRICATED WITH BELCORE APPROVED LUBRICANT, TECHNICAL REFERENCE: TR-NWT-001217 ISSUE 1, SEP 1992.
15. OBSOLETE PARTS: OBSOLETE CIS STREAMLINING PER D.RENAUD/D.SINISI
16. 0.76um MIN GOLD PLATING ON MATING SURFACES

THIS DRAWING IS A CONTROLLED DOCUMENT.

DIMENSIONS: mm

TOLERANCES UNLESS OTHERWISE SPECIFIED:
0 PLC ± —
1 PLC ± 0.1
2 PLC ± —
3 PLC ± —
4 PLC ± —
ANGLES ± 1°
±0.2

MATERIAL: SEE SHEET 1
FINISH: SEE SHEET 1

DWN B.CARBO 07JAN05
CHK G.SKIPPER 07JAN05
APVD G.SKIPPER 07JAN05
PRODUCT SPEC 108-1622
APPLICATION SPEC 114-19029
WEIGHT —

Tyco Electronics
Tyco Electronics Corporation
Harrisburg, Pa 17105-3608

NAME: MALE ASSEMBLY, Z-PACK 2mm HM, TYPE D

SIZE	CAGE CODE	DRAWING NO	RESTRICTED TO
A1	00779	C-5646346	—

CUSTOMER DRAWING
SCALE 4:1 SHEET 2 OF 2 REV C