THIS DRAWING IS UNPUBLISHED. RELEASED FOR PUBLICATION -,- .
© COPYRIGHT - BY TYCO ELECTRONICS CORPORATION. ALL RIGHTS RESERVED.

LOC	DIST
GP	00

REVISIONS

P	LTR	DESCRIPTION	DATE	DWN	APVD
	01	REVISED PER ECO-06-007631	12SEP06	JDP	CWR

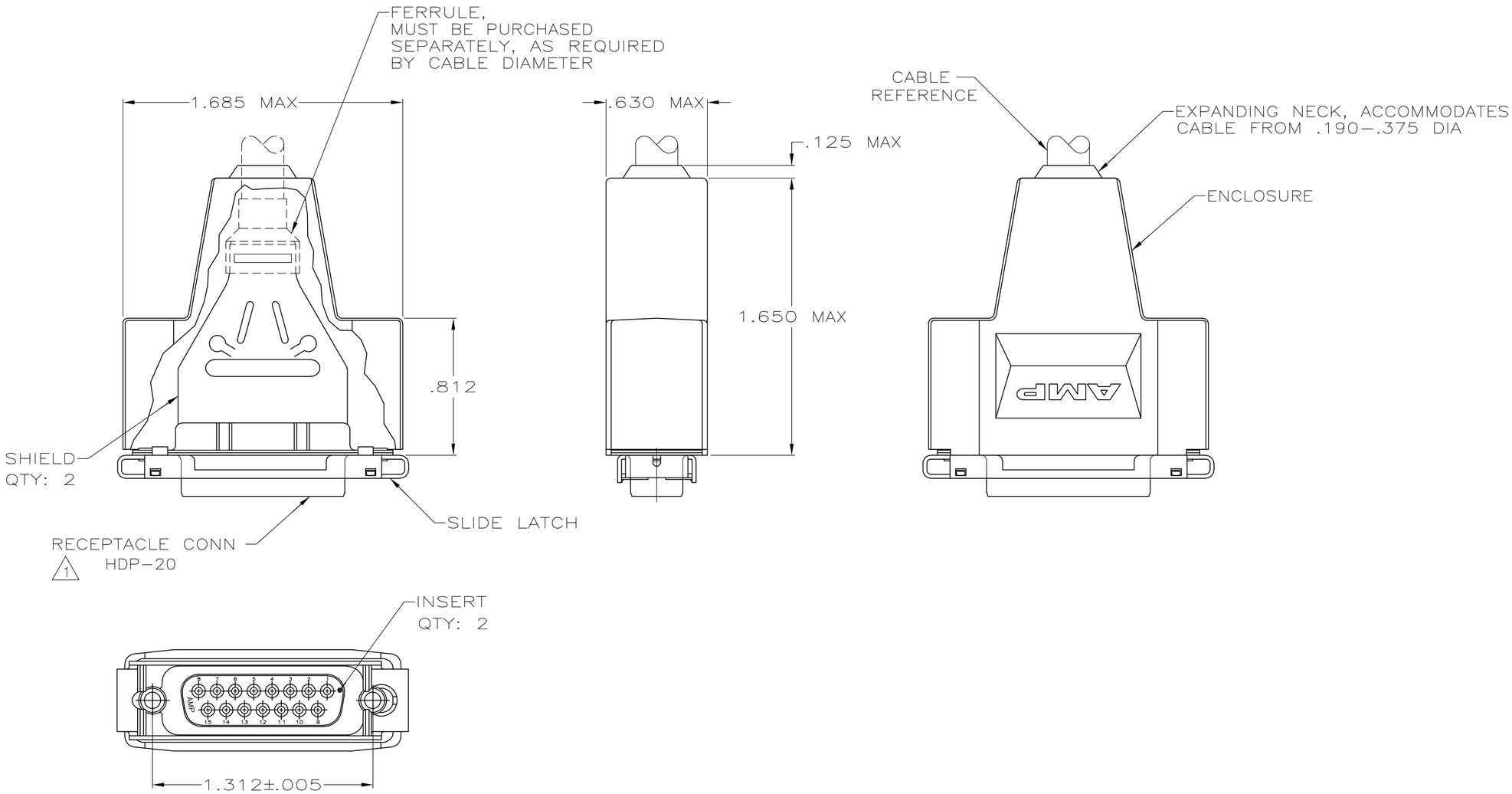

(1) RECEPTACLE ACCEPTS SIZE 20 DF SOCKET CONTACTS. CONTACTS MUST BE PURCHASED SEPARATELY.

2. ALL PARTS SHIPPED UNASSEMBLED.

3. COMPONENTS INDIVIDUALLY BULK PACKAGED.

(4) ENCLOSURE: ELASTOMER, STYRENE POLYOLEFIN, OR PVC, BLACK.

(5) SLIDE LATCH: STAINLESS STEEL PER ASTM A167.

(6) INSERTS: FLAME RETARDANT, 94V-0 RATED, GLASS FILLED, NYLON, BLACK.

(7) SHIELDS & SHELLS: CARBON STEEL PER ASTM A109.

(8) SHELLS & SHIELDS: .000200 MIN TIN PLATE OVER .000050 MIN COPPER UNDERPLATE.

5749246-1

PART NUMBER

THIS DRAWING IS A CONTROLLED DOCUMENT.

DIMENSIONS: INCHES

TOLERANCES UNLESS OTHERWISE SPECIFIED:
0 PLC ± -
1 PLC ± -
2 PLC ± -
3 PLC ± .020
4 PLC ± -
ANGLES ± -

MATERIAL (4)(5)(6)(7)

FINISH (8)

DWN 11-11-04 G. ATTADIA - DOCK5
CHK 11-11-04 J. GERACE
APVD 11-11-04 M. WALMSLEY
PRODUCT SPEC
APPLICATION SPEC 114-40030
WEIGHT -

tyco Electronics
Tyco Electronics Corporation
Harrisburg, PA 17105-3608

NAME
SHIELDING ENCLOSURE KIT, RECEPTACLE, SIZE 2, 15 POSITION, WITH PREASSEMBLED SLIDE LATCH, AMPLIMITE, HDP-20

SIZE	CAGE CODE	DRAWING NO	RESTRICTED TO
A2	00779	C-5749246	-

CUSTOMER DRAWING | SCALE 2:1 | SHEET 1 OF 1 | REV 01

5749246

AMP 1471-9 REV 31MAR2000