THIS DRAWING IS UNPUBLISHED. RELEASED FOR PUBLICATION -,- .
© COPYRIGHT - By - ALL RIGHTS RESERVED.

DESCRIPTION	MATERIAL	FINISH
MODULE ASSEMBLY	THERMOSET EPOXY	COLOR: BLACK
GROMMET	FLUORSILICONE RUBBER PER MIL-T-81714,CLASS B	COLOR: RED
CONTACT SOCKET	BERYILLIUM COPPER ASTM-B-194	GOLD PLATE PER ASTM-B-488
RETAINING CLIP	BERYILLIUM COPPER ASTM-B-194 OR STAINLESS STEEL PER QQ-S-766	NONE
RESISTOR (QTY=1)	RLR20C1500GS 150 Ω	NONE

REVISIONS

P	LTR	DESCRIPTION	DATE	DWN	APVD
	B	REV PER ECO 16-015310	11-22-16	CT	HA

1. MODULE ASSEMBLY MARKED WITH GAGE CODE "00779", "AMP", AMP PART NO. AND DATE CODE .060 MINIMUM CHARACTERS
2. CUSTOMER PART NO. (SEE TABLE) MARKED IN AREA SHOWN. -2 ONLY.
3. FOUR PIN CONTACTS (M39029/1-101) ARE PACKAGED SEPARATELY WITH CONNECTOR.
4. MARKING FOR WIRE SUPPORT IS IN CONTRASTING COLORS.

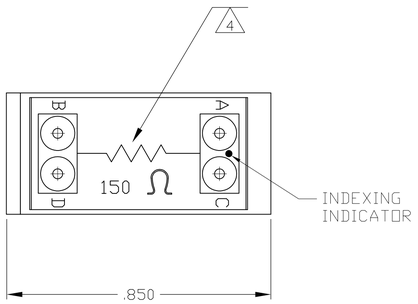

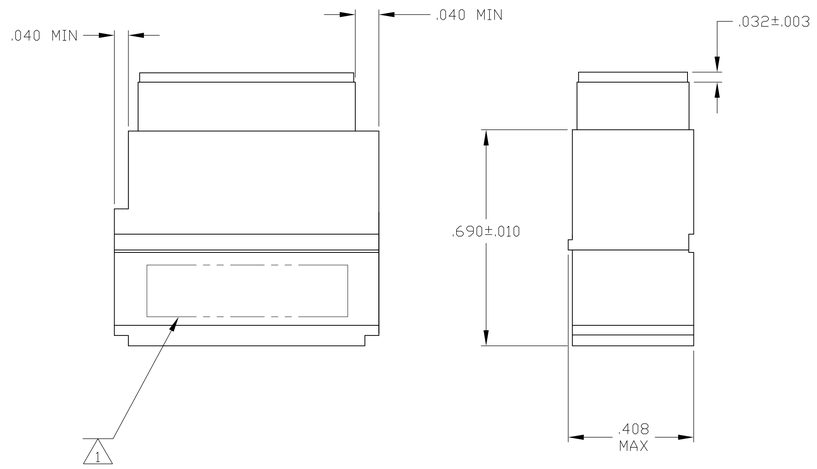

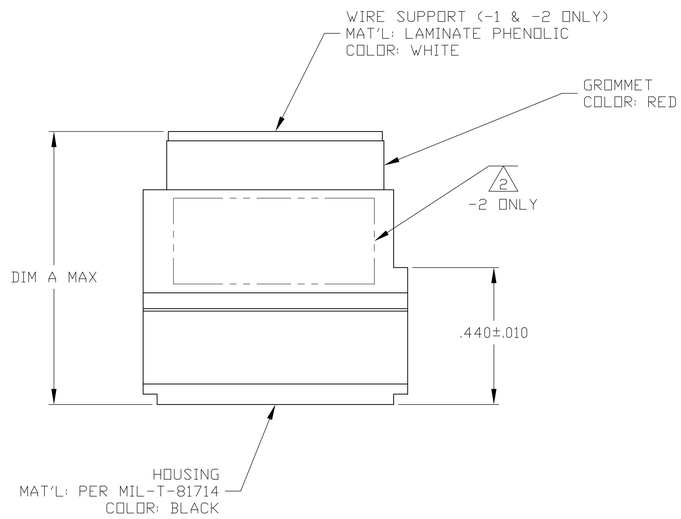

DIM A	CUSTOMER PART NO.	PART NO.
.847	--	591829-3
.885	110-121-1	591829-2
.885	--	591829-1

THIS DRAWING IS A CONTROLLED DOCUMENT.

DIMENSIONS: INCHES

TOLERANCES UNLESS OTHERWISE SPECIFIED:
0 PLC ± -
1 PLC ± -
2 PLC ± -
3 PLC ± .005
4 PLC ± -
ANGLES ± -

MATERIAL -
FINISH -

DWN C. C. THOMAS 01DEC03
CHK D. EABY 12-2-03
APVD D. EABY 12-2-03
PRODUCT SPEC —
APPLICATION SPEC —
WEIGHT 0.000000

TE Connectivity

NAME REMOVABLE MODULE BLOCK WITH RESISTOR, SIZE 20, TJ
—

SIZE	CAGE CODE	DRAWING NO	RESTRICTED TO
A1	00779	C-591829	—

CUSTOMER DRAWING | SCALE 4:1 | SHEET 1 OF 1 | REV B

4805 (1/15)