THIS DRAWING IS UNPUBLISHED. RELEASED FOR PUBLICATION -,- .
© COPYRIGHT - By - ALL RIGHTS RESERVED.

LOC	DIST
AF	50

REVISIONS

P	LTR	DESCRIPTION	DATE	DWN	APVD
	C	REVISED PER ECR-13-001204	04JUN13	KH	PD

1 SUPPLIED IN LOOSE PIECE

2 .000150 MIN TIN PLATE OVER .000100 MIN COPPER.

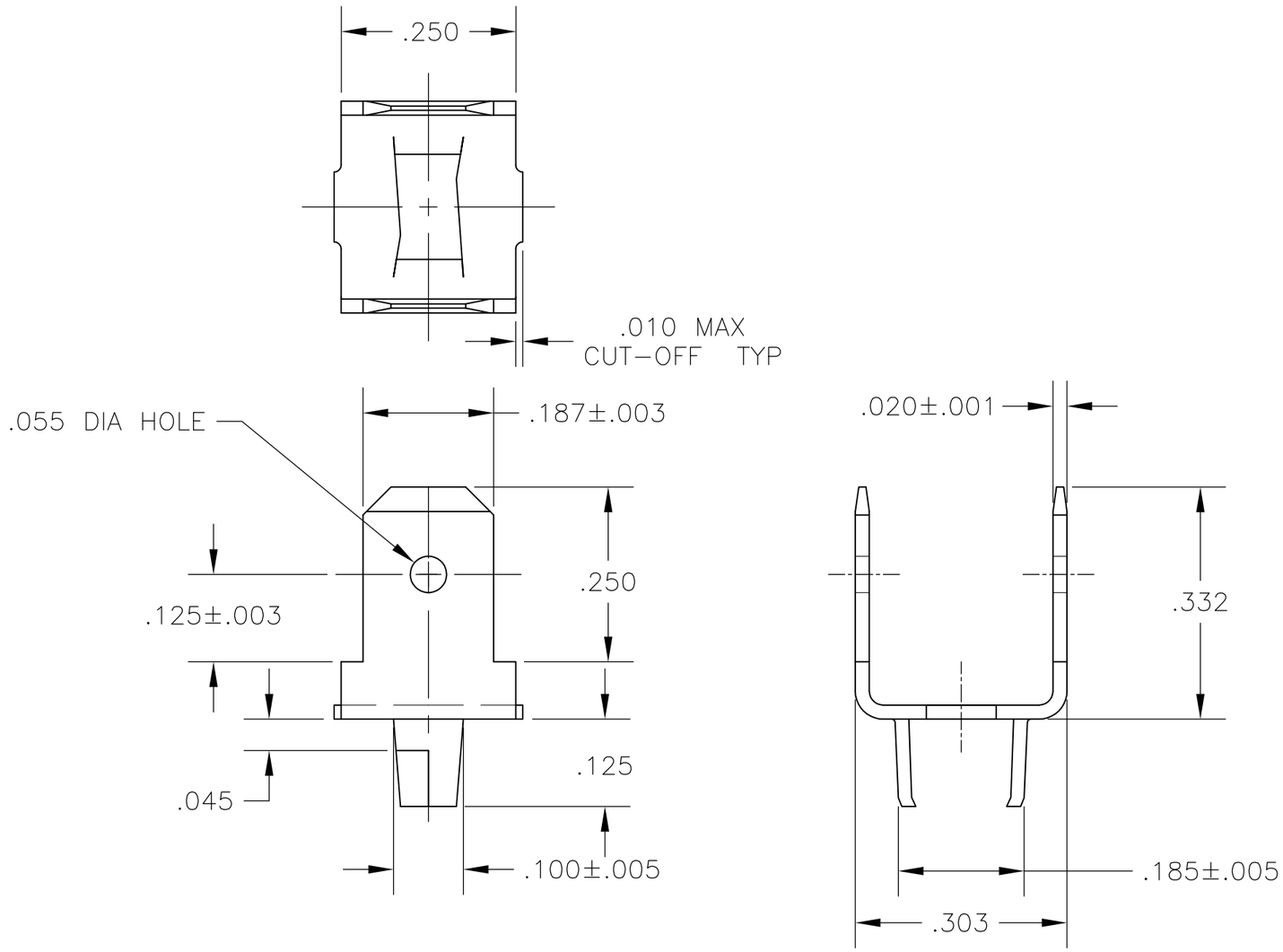

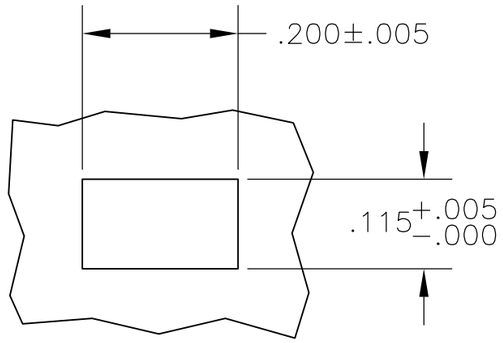

REQUIRED HOLE SIZE FOR STAKING INTO A .062 THICK BOARD

62705-1

PART NO.

THIS DRAWING IS A CONTROLLED DOCUMENT.

DIMENSIONS: INCHES

TOLERANCES UNLESS OTHERWISE SPECIFIED:

0 PLC	± -
1 PLC	± -
2 PLC	± -
3 PLC	± .015
4 PLC	± -
ANGLES	± -

MATERIAL: BRASS

FINISH: 2

DWN	JR RUTH	15FEB02
CHK	MS FEHER	15FEB02
APVD	N DEIBERT	15FEB02
PRODUCT SPEC	—	
APPLICATION SPEC	—	
WEIGHT	—	

CUSTOMER DRAWING

TE Connectivity

NAME: TAB, FASTON, DUAL, STAKE, .187 SERIES

SIZE	CAGE CODE	DRAWING NO	RESTRICTED TO
A3	00779	C-62705	—

SCALE	SHEET	REV
5:1	1 OF 1	C