DRAWING MADE IN THIRD ANGLE PROJECTION

THIS DRAWING IS UNPUBLISHED. RELEASED FOR PUBLICATION ,19 .

© COPYRIGHT 19 BY AMP INCORPORATED. ALL INTERNATIONAL RIGHTS RESERVED.

LOC	DIST
BD	95

P	F	ZONE	LTR	DESCRIPTION	DATE	APPD
			D	ADDED -2 PER NPR 3466	05/02/91	–
			E	OBS -1 PER EC 0020-481-96	10 JAN 97	LB

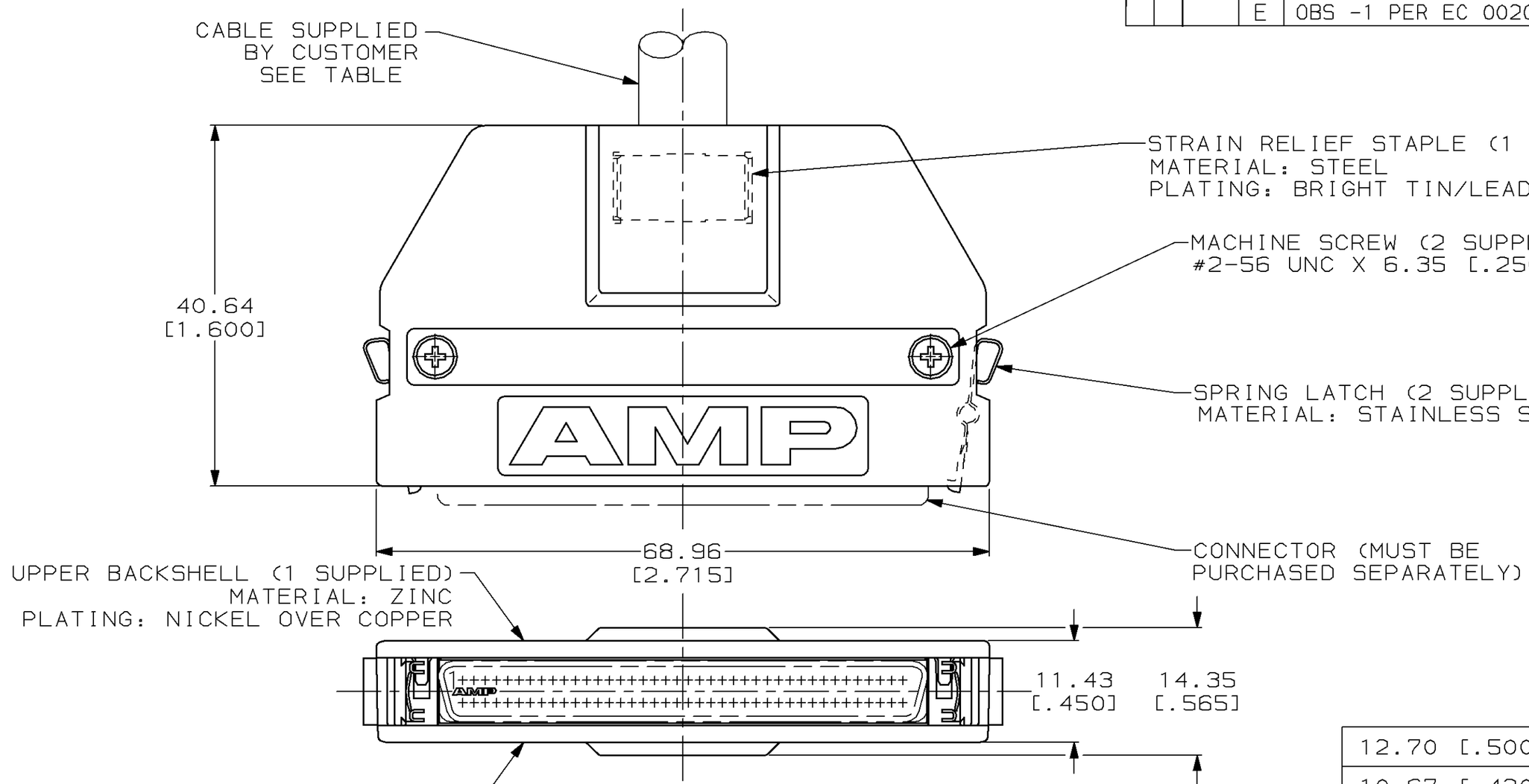

MAX CABLE DIA	PART NO
12.70 [.500]	749196-2
10.67 [.420]	1 749196-1

1 OBSOLETE PART NUMBER.

DO NOT SCALE PRINT.
UNLESS SPECIFIED
DIMENSIONS IN mm [INCHES]
TOLERANCES ON:
2 PLC DEC ± -
3 PLC DEC ± 0.38 [.015]
ANGLES ± -

MATERIAL –

FINISH –

DR	12-20-88	M.A.McCAFFREY
CHK	12-20-88	M.E.SHIRK
APPD	12-20-88	J.BROSCHARD
APPD	12-20-88	C.E.REYNOLDS

PRODUCT SPEC –

APPLICATION SPEC –

WEIGHT –

AMP INCORPORATED
Harrisburg, Pa. 17105

NAME INDIVIDUAL KIT, UNASSEMBLED, 80 POSITION, STRAIGHT EXIT, UNKEYED, AMPLIMITE .050 Series

SIZE	FSCM NO	DRAWING NO
B	00779	749196
SCALE 2:1		SHEET 1 OF 1

CUSTOMER DRAWING

AMP 1470-15 REV 3-87

10-JAN-97 09:13:32 amp35397 /home/ssrv026d/dsk04/dept4023/amp35397/edmmod