THIS DRAWING IS UNPUBLISHED. RELEASED FOR PUBLICATION 20
© COPYRIGHT 20 BY - ALL RIGHTS RESERVED.

REVISIONS

| P | LTR | DESCRIPTION | DATE | DWN | APVD |
|---|---|---|---|---|---|
| | G1 | REVISED PER ECR-16-011494 | 21JUN2017 | NK | CX |

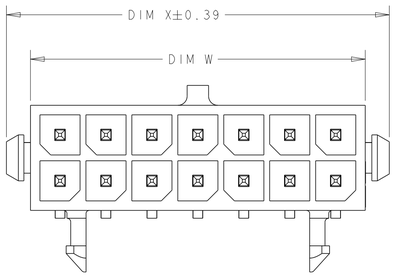


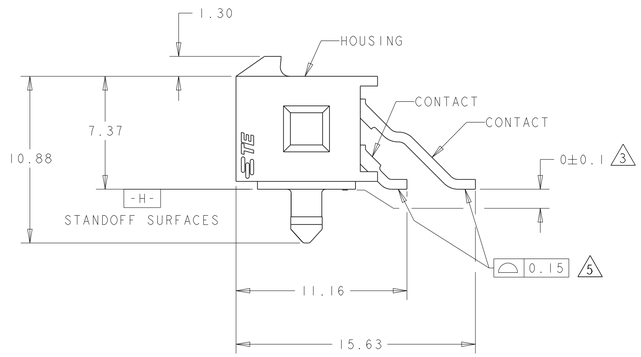


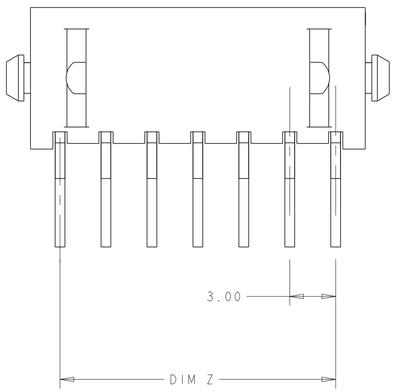


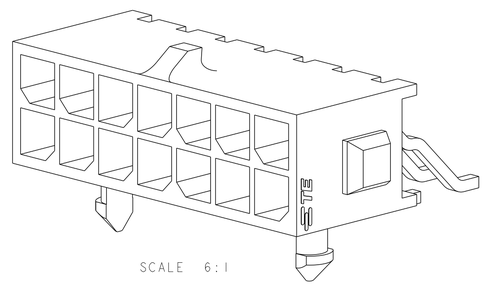

SCALE 6:1

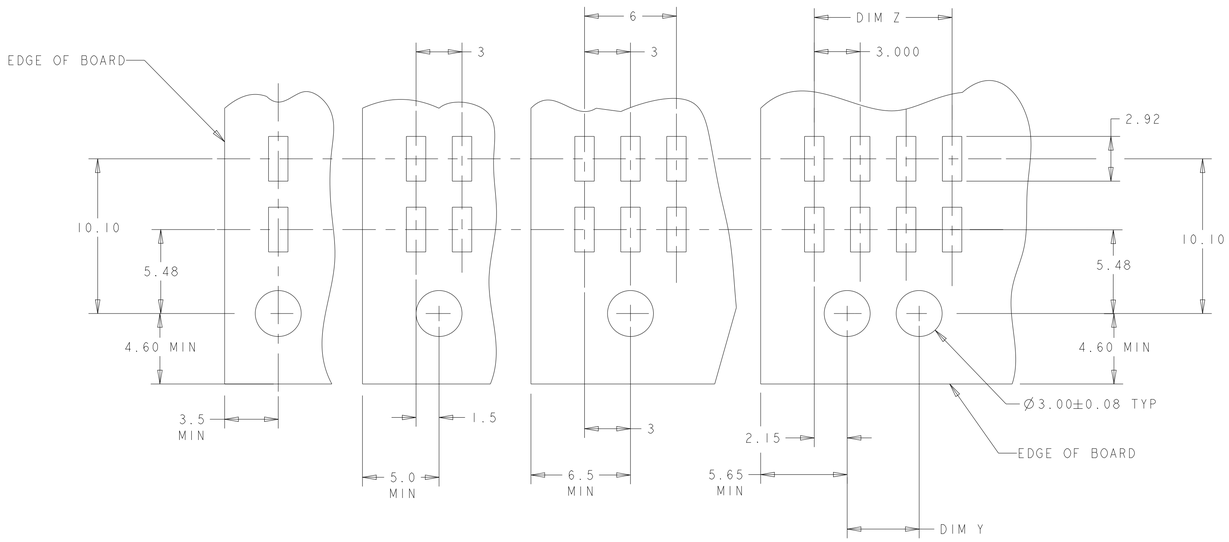


RECOMMENDED PCB LAYOUT 4
(COMPONENT SIDE)

1. MATERIAL;
   CONTACTS - BRASS.
   HOUSING - UL 94V-0 RATED HIGH TEMP NYLON, COLOR; BLACK.
2. PLATING;
   CONTACTS - 0.38µm MINIMUM GOLD OVER 2.54µm MINIMUM NICKEL ON MATING AREA. 2.54µm TIN-LEAD MINIMUM OVER 2.54µm NICKEL MINIMUM ON SOLDER TAILS.
3. DIMENSION APPLIES TO SOLDERTAIL SURFACES AND STANDOFF SURFACES.
4. RECOMMENDED PC BOARD THICKNESS OF 1.57.
5. ALL SOLDERTAILS.
6. PLATING;
   CONTACTS - 0.38µm MINIMUM GOLD OVER 2.54µm MINIMUM NICKEL ON MATING AREA. 2.54µm MATTE TIN MINIMUM OVER 2.54µm NICKEL MINIMUM ON SOLDER TAILS.

| | FINISH | DIM W | DIM Y | DIM Z | DIM X | NO. OF POSN. | PART NUMBER |
|---|---|---|---|---|---|---|---|
| | 6 | 36.86 | 28.70 | 33.00 | 40.00 | 24 | 5-794622-4 |
| | 6 | 33.86 | 25.70 | 30.00 | 37.00 | 22 | 5-794622-2 |
| | 6 | 30.86 | 22.70 | 27.00 | 34.00 | 20 | 5-794622-0 |
| | 6 | 27.86 | 19.70 | 24.00 | 31.00 | 18 | 4-794622-8 |
| | 6 | 24.86 | 16.70 | 21.00 | 28.00 | 16 | 4-794622-6 |
| | 6 | 21.86 | 13.70 | 18.00 | 25.00 | 14 | 4-794622-4 |
| | 6 | 18.86 | 10.70 | 15.00 | 22.00 | 12 | 4-794622-2 |
| | 6 | 15.86 | 7.70 | 12.00 | 19.00 | 10 | 4-794622-0 |
| | 6 | 12.86 | 4.70 | 9.00 | 16.00 | 8 | 3-794622-8 |
| | 6 | 9.86 | - | 6.00 | 13.00 | 6 | 3-794622-6 |
| | 6 | 6.86 | - | 3.00 | 10.00 | 4 | 3-794622-4 |
| | 6 | 3.86 | - | - | 7.00 | 2 | 3-794622-2 |
| SUPERSEDED BY 5-794622-4 | 2 | 36.86 | 28.70 | 33.00 | 40.00 | 24 | ~~2-794622-4~~ |
| SUPERSEDED BY 5-794622-2 | 2 | 33.86 | 25.70 | 30.00 | 37.00 | 22 | ~~2-794622-2~~ |
| SUPERSEDED BY 5-794622-0 | 2 | 30.86 | 22.70 | 27.00 | 34.00 | 20 | ~~2-794622-0~~ |
| SUPERSEDED BY 4-794622-8 | 2 | 27.86 | 19.70 | 24.00 | 31.00 | 18 | ~~1-794622-8~~ |
| SUPERSEDED BY 4-794622-6 | 2 | 24.86 | 16.70 | 21.00 | 28.00 | 16 | ~~1-794622-6~~ |
| SUPERSEDED BY 4-794622-4 | 2 | 21.86 | 13.70 | 18.00 | 25.00 | 14 | ~~1-794622-4~~ |
| SUPERSEDED BY 4-794622-2 | 2 | 18.86 | 10.70 | 15.00 | 22.00 | 12 | ~~1-794622-2~~ |
| SUPERSEDED BY 4-794622-0 | 2 | 15.86 | 7.70 | 12.00 | 19.00 | 10 | ~~1-794622-0~~ |
| SUPERSEDED BY 3-794622-8 | 2 | 12.86 | 4.70 | 9.00 | 16.00 | 8 | ~~794622-8~~ |
| SUPERSEDED BY 3-794622-6 | 2 | 9.86 | - | 6.00 | 13.00 | 6 | ~~794622-6~~ |
| SUPERSEDED BY 3-794622-4 | 2 | 6.86 | - | 3.00 | 10.00 | 4 | ~~794622-4~~ |
| SUPERSEDED BY 3-794622-2 | 2 | 3.86 | - | - | 7.00 | 2 | ~~794622-2~~ |

THIS DRAWING IS A CONTROLLED DOCUMENT.

DIMENSIONS: mm

TOLERANCES UNLESS OTHERWISE SPECIFIED:
0 PLC ±-
1 PLC ±-
2 PLC ±0.13
3 PLC ±-
4 PLC ±-
ANGLES ±-

MATERIAL 1

FINISH SEE TABLE

DWN K. WHITAKER 28JAN2002
CHK C. JONES 28JAN2002
APVD C. JONES 28JAN2002

PRODUCT SPEC -
APPLICATION SPEC -
WEIGHT -

TE Connectivity

NAME SURFACE MOUNT, R/A, 15 GOLD HEADER, PLASTIC BOARDLOCK, DUAL ROW, MICRO MATE-N-LOK (TM)

SIZE A1 | CAGE CODE 00779 | DRAWING NO C-794622 | RESTRICTED TO -

CUSTOMER DRAWING | SCALE 5:1 | SHEET 1 OF 1 | REV G1

4805 (3/13)