DRAWING MADE IN AMERICAN PROJECTION

©1976 BY AMP INCORPORATED. ALL RIGHTS RESERVED. AMP PRODUCTS COVERED BY PATENTS AND/OR PATENTS PENDING.

Unpublished copy not to be reproduced or published without written permission of AMP Incorporated

THIS PRODUCT DESIGNED AND BUILT BY AMP INCORPORATED. NO LICENSE TO USE THAT DESIGN IN MANUFACTURE, OR TO USE ANY ISSUED OR PENDING PATENTS WHICH ARE INVOLVED, IS IMPLIED.

NUMBER

P	F	ZONE	LTR	DESCRIPTION		DATE	APPROVED
			A	ECN 9034	JG	2-22-80	M.A.
			B	REV PER OH14-0120-03	CT	10-04	CT

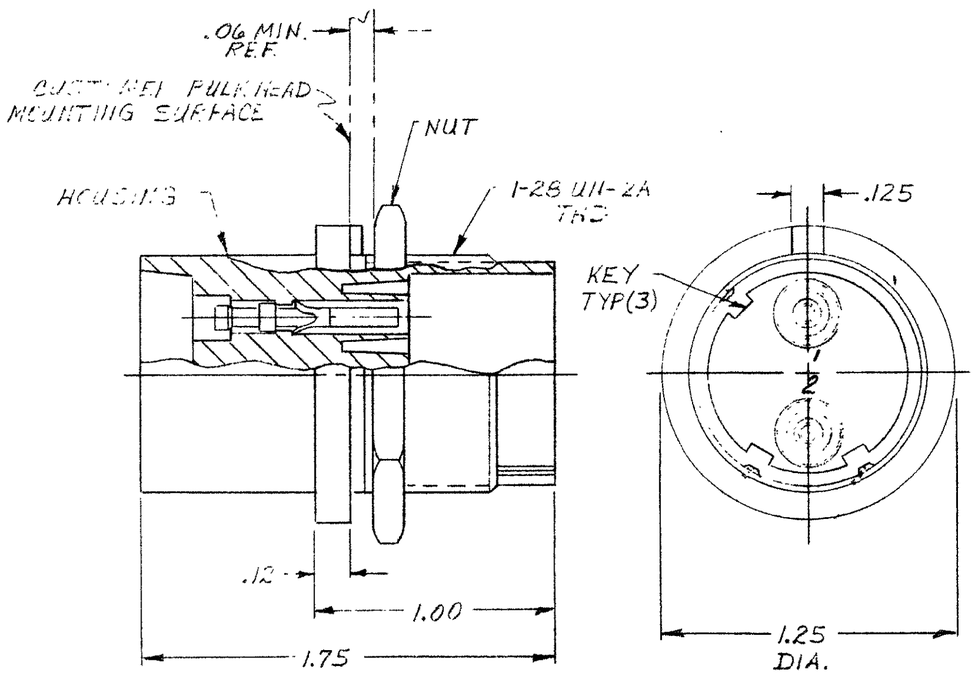

RECEPTACLE

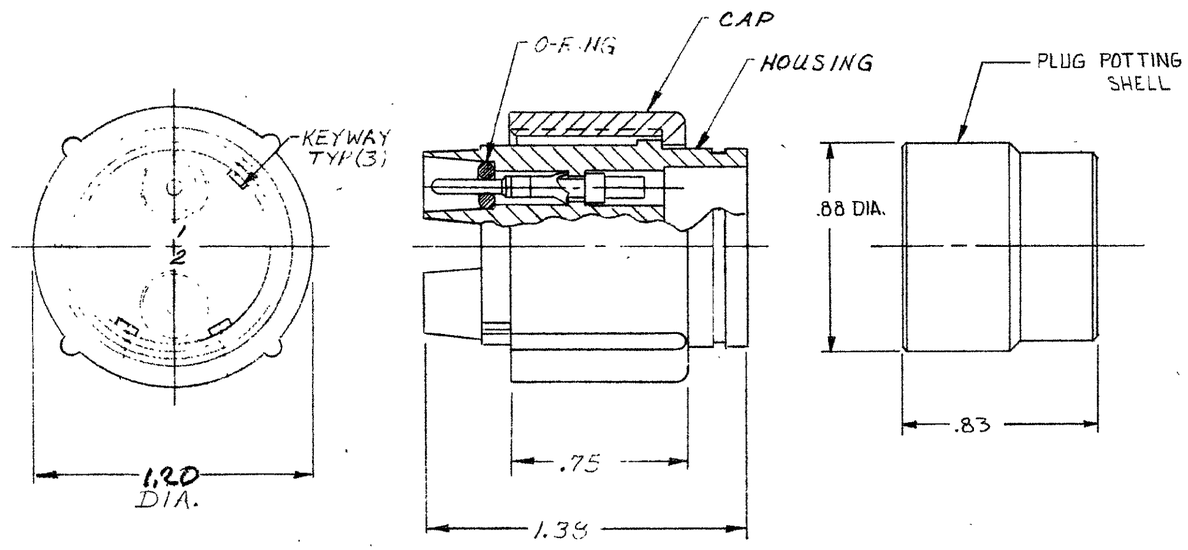

PLUG

AMP P/N	RECEPTACLE	PLUG	WIRE SIZE RANGE	HAND TOOL
863015-1	859529-4	863020-1	20,22,24	45099
863015-2	859529-5	863020-2	16,18	45098
863015-3	859529-6	863020-3	14	45098

NOTE:
1. #16 GA. PINS & SOCKETS GOLD PLATED PER MIL-G-45204, TYPE II, .00005 MIN. THK.
2. TYPE II PINS & SOCKETS TO ACCEPT (1) 20AWG, (1) 22 AWG, OR (1) 24 AWG STRANDED WIRE
3. TYPE II PINS & SOCKETS TO ACCEPT (1) 16 AWG OR (1) 18 AWG STRANDED WIRE
4. PINS & SOCKETS SUPPLIED SEPARATELY IN A PLASTIC BAG.
5. TYPE II PINS & SOCKETS TO ACCEPT ONE (1) 14 AWG STANDED WIRE.

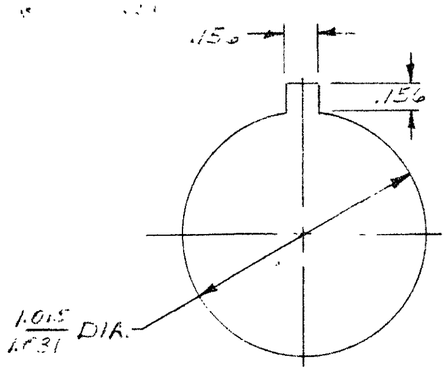

RECOMMENDED PANEL CUTOUT

QTY REQD -2	QTY REQD -1	ITEM NO.	DWG SIZE	PART OR IDENTIFYING NO.	NOMENCLATURE OR DESCRIPTION	SYMBOL

PARTS LIST

NEXT ASSY	FINAL ASSY	NEXT ASSY	USED ON
QTY REQD		APPLICATION	

UNLESS OTHERWISE SPECIFIED: DIMENSIONS ARE IN INCHES
TOLERANCES
.00 = ±
.000 = ±
ANGLES = ±

MATERIAL: MOLDED PLASTIC

FINISH: BLACK

CONTRACT NO.

DR DICK STONE 3-2-76

CHK

APPD

APPD

DSGN APPD

OTHER APPD

AMP INCORPORATED
CAPITRON DIVISION
ELIZABETHTOWN, PENNSYLVANIA

NAME 2 PIN PLUG & RECEPTACLE KIT

LGH

SIZE	CODE IDENT NO.	NUMBER
C	00779	863015

SCALE 2-1 | WT | SHEET 1 OF 1

REV. B

CUSTOMER DRAWING

PRINT DIST 37

AMP 1471 REV 2/69