74ABT126

Quad buffer; 3-state

Rev. 5 — 4 April 2017 Product data sheet

1 General description

The 74ABT126 high-performance BiCMOS device combines low static and dynamic power dissipation with high speed and high output drive.

The 74ABT126 device is a quad buffer that is ideal for driving bus lines. The device features four output enable inputs (nOE) each controlling one of the 3-state outputs (nY).

2 Features and benefits

- Quad bus interface
- 3-state buffers
- Live insertion and extraction permitted
- Output capability: +64 mA and -32 mA
- Inputs are disabled during 3-state mode
- Power-up 3-state
- Latch-up protection:
  - JESD78: exceeds 500 mA
- ESD protection:
  - MIL STD 883 method 3015: exceeds 2000 V
  - MM JESD22-A115-A exceeds 200 V

3 Ordering information

Table 1. Ordering information

Type number	Package			
	Temperature range	Name	Description	Version
74ABT126D	-40 °C to +85 °C	SO14	plastic small outline package; 14 leads; body width 3.9 mm	SOT108-1
74ABT126DB	-40 °C to +85 °C	SSOP14	plastic shrink small outline package; 14 leads; body width 5.3 mm	SOT337-1
74ABT126PW	-40 °C to +85 °C	TSSOP14	plastic thin small outline package; 14 leads; body width 4.4 mm	SOT402-1

nexperia

4 Functional diagram

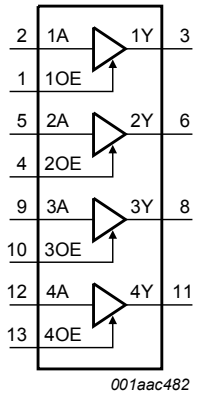

Figure 1. Logic symbol

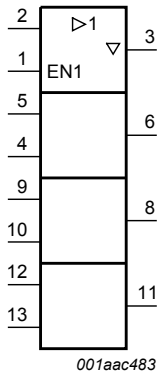

Figure 2. IEC logic symbol

5 Pinning information

5.1 Pinning

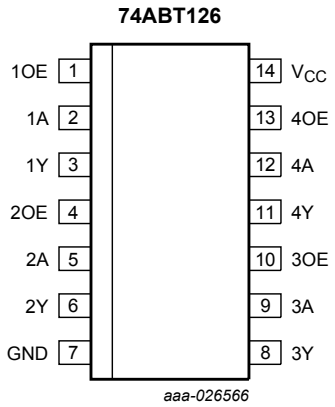

Figure 3. Pin configuration SOT108-1 (SO14)

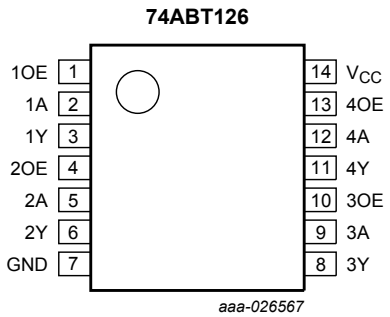

Figure 4. Pin configuration SOT337-1 (SSOP14) and SOT402-1 (TSSOP14)

5.2 Pin description

Table 2. Pin description

Symbol	Pin	Description
1OE, 2OE, 3OE, 4OE	1, 4, 10, 13	output enable inputs
1A, 2A, 3A, 4A	2, 5, 9, 12	data inputs
1Y, 2Y, 3Y, 4Y	3, 6, 8, 11	data outputs
GND	7	ground (0 V)
V_{CC}	14	supply voltage

6 Functional description

Table 3. Function table [1]

Input		Output
nOE	nA	nY
H	L	L
H	H	H
L	X	Z

[1] H = HIGH voltage level;
L = LOW voltage level;
X = don't care;
Z = high-impedance OFF-state.

7 Limiting values

Table 4. Limiting values

In accordance with the Absolute Maximum Rating System (IEC 60134). Voltages are referenced to GND (ground = 0 V).

Symbol	Parameter	Conditions		Min	Max	Unit
V_{CC}	supply voltage			-0.5	+7.0	V
V_I	input voltage		[1]	-1.2	+7.0	V
V_O	output voltage	output in OFF-state or HIGH-state	[1]	-0.5	+5.5	V
I_{IK}	input clamping current	$V_I < 0$ V		-18	-	mA
I_{OK}	output clamping current	$V_O < 0$ V		-50	-	mA
I_O	output current	output in LOW-state		-	128	mA
T_j	junction temperature		[2]	-	150	°C
T_{stg}	storage temperature			-65	+150	°C

[1] The input and output voltage ratings may be exceeded if the input and output current ratings are observed.
[2] The performance capability of a high-performance integrated circuit in conjunction with its thermal environment can create junction temperatures which are detrimental to reliability.

8 Recommended operating conditions

Table 5. Recommended operating conditions

Symbol	Parameter	Conditions	Min	Typ	Max	Unit
V_{CC}	supply voltage		4.5	-	5.5	V
V_I	input voltage		0	-	V_{CC}	V
I_{OH}	HIGH-level output current		-32	-	-	mA
I_{OL}	LOW-level output current		-	-	64	mA
$\Delta t/\Delta V$	input transition rise and fall rate		0	-	10	ns/V
T_{amb}	ambient temperature	in free air	-40	-	+85	°C

9 Static characteristics

Table 6. Static characteristics

At recommended operating conditions; voltages are referenced to GND (ground = 0 V).

Symbol	Parameter	Conditions	T_{amb} = 25 °C			T_{amb} = -45 °C to +85 °C		Unit
			Min	Typ	Max	Min	Max	
V_{IK}	input clamping voltage	V_{CC} = 4.5 V; I_{IK} = -18 mA	-1.2	-0.9	-	-1.2	-	V
V_{IH}	HIGH-level input voltage		2.0	-	-	2.0	-	V
V_{IL}	LOW-level input voltage		-	-	0.8	-	0.8	V
V_{OH}	HIGH-level output voltage	V_{CC} = 4.5 V; V_I = V_{IL} or V_{IH}						
		I_{OH} = -3 mA	2.5	2.9	-	2.5	-	V
		I_{OH} = -32 mA	2.0	2.4	-	2.0	-	V
		V_{CC} = 5.0 V; V_I = V_{IL} or V_{IH}						
		I_{OH} = -3 mA	3.0	3.4	-	3.0	-	V
V_{OL}	LOW-level output voltage	V_{CC} = 4.5 V; V_I = V_{IL} or V_{IH}						
		I_{OL} = 64mA	-	0.35	0.55	-	0.55	V
I_I	input leakage current	V_{CC} = 5.5 V; V_I = GND or 5.5 V	-	±0.01	±1.0	-	±1.0	μA
I_{OFF}	power-off leakage current	V_{CC} = 0 V; V_O or V_I ≤ 4.5 V	-	±5.0	±100	-	±100	μA
$I_{O(pu/pd)}$	power-up/power-down output current	V_{CC} = 2.1 V; V_O = 0.5 V; V_I = GND or V_{CC}; nOE = don't care [1]	-	±5.0	±50	-	±50	μA
I_{OZ}	OFF-state output current	V_{CC} = 5.5 V; V_I = V_{IL} or V_{IH}						
		output HIGH-state at V_O = 2.7 V	-	1.0	50	-	50	μA
		output LOW-state at V_O = 0.5 V	-50	-1.0	-	-50	-	μA
I_{CEX}	output high leakage current	V_{CC} = 5.5 V; V_O = 5.5 V; V_I = GND or V_{CC}	-	5.0	50	-	50	μA
I_O	output current	V_{CC} = 5.5 V; V_O = 2.5 V [2]	-180	-100	-50	-180	-50	mA
I_{CC}	supply current	V_{CC} = 5.5 V; V_I = GND or V_{CC}						
		outputs HIGH-state	-	65	250	-	250	μA
		outputs LOW-state	-	12	15	-	15	mA
		outputs 3-state	-	65	250	-	250	μA
ΔI_{CC}	additional supply current							
	per data input pin	one data input at 3.4 V and other inputs at V_{CC} or GND; V_{CC} = 5.5 V [3]						
		outputs enabled	-	0.5	1.5	-	1.5	mA
		outputs 3-state	-	50	250	-	250	μA

Symbol	Parameter	Conditions		T_{amb} = 25 °C			T_{amb} = -45 °C to +85 °C		Unit
				Min	Typ	Max	Min	Max	
	per enable input pin	one enable input at 3.4 V and other inputs at V_{CC} or GND; V_{CC} = 5.5 V	[3]						
		outputs 3-state		-	0.5	1.5	-	1.5	mA
C_I	input capacitance	V_I = 0 V or V_{CC}		-	4	-	-	-	pF
C_O	output capacitance	outputs disabled; V_O = 0 V or V_{CC}		-	7	-	-	-	pF

[1] This parameter is valid for any V_{CC} between 0 V and 2.1 V, with a transition time of up to 10 ms. From V_{CC} = 2.1 V to V_{CC} = 5 V ± 10 % a transition time of up to 100 μs is permitted.
[2] Not more than one output should be tested at a time, and the duration of the test should not exceed one second.
[3] This is the increase in supply current for each input at 3.4 V.

10 Dynamic characteristics

Table 7. Dynamic characteristics

Voltages are referenced to GND (ground = 0 V); for test circuit see Figure 7.

Symbol	Parameter	Conditions	T_{amb} = 25 °C; V_{CC} = 5.0 V			T_{amb} = -40 °C to +85 °C; V_{CC} = 5.0 V ± 0.5 V		Unit
			Min	Typ	Max	Min	Max	
t_{PLH}	LOW to HIGH propagation delay	nA to nY; see Figure 5	1.0	2.9	4.2	1.0	4.4	ns
t_{PHL}	HIGH to LOW propagation delay	nA to nY; see Figure 5	1.0	3.0	4.3	1.0	4.6	ns
t_{PZH}	OFF-state to HIGH propagation delay	see Figure 6	1.5	3.2	5.8	1.5	6.5	ns
t_{PZL}	OFF-state to LOW propagation delay	see Figure 6	1.9	4.4	5.9	1.9	6.5	ns
t_{PHZ}	HIGH to OFF-state propagation delay	see Figure 6	1.0	4.2	5.2	1.0	5.8	ns
t_{PLZ}	LOW to OFF-state propagation delay	see Figure 6	1.0	2.9	4.9	1.0	5.5	ns

10.1 Waveforms and test circuit

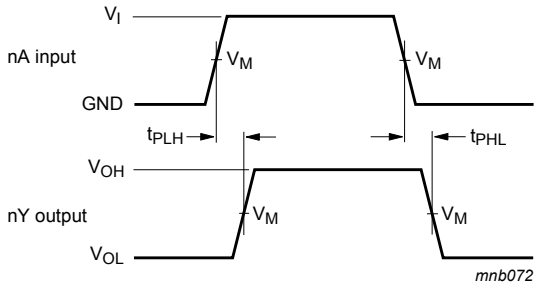

Measurement points are given in Table 8.

V_{OL} and V_{OH} are typical voltage output drop that occur with the output load.

Figure 5. Propagation delay input (nA) to output (nY)

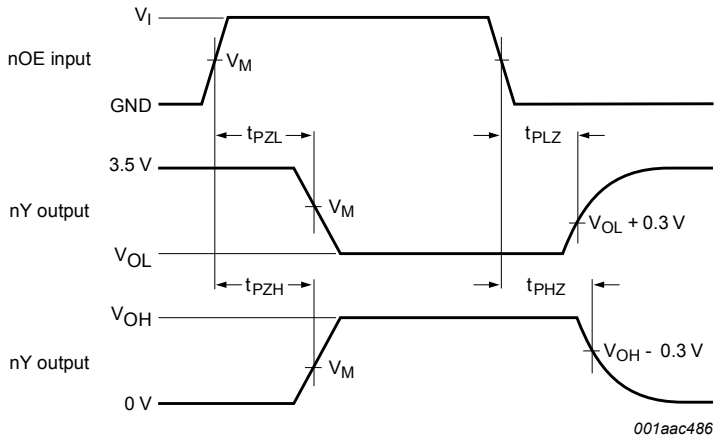

Measurement points are given in Table 8.

V_{OL} and V_{OH} are typical voltage output drop that occur with the output load.

Figure 6. Enable and disable times of 3-state outputs

Table 8. Measurement points

Input	Output
V_M	V_M
1.5 V	1.5 V

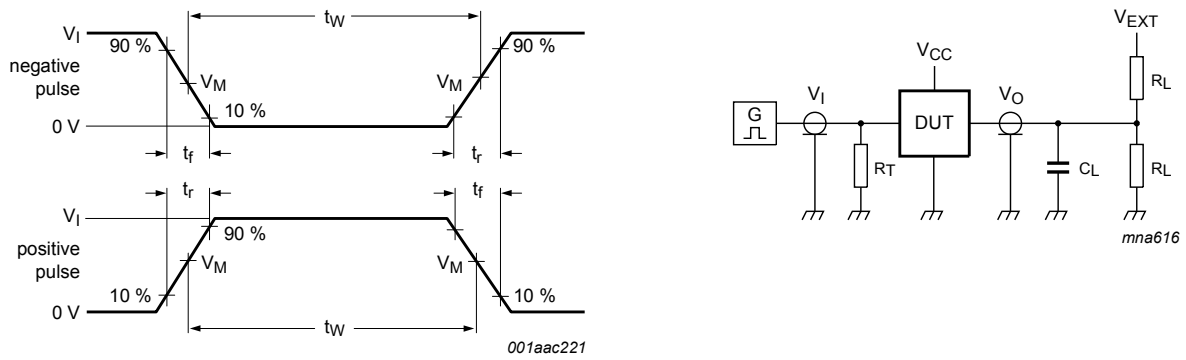

a. Input pulse definition

V_M = 1.5 V.

b. Test circuit

Test data is given in Table 9.

Definitions test circuit:

R_L = Load resistance.

C_L = Load capacitance including jig and probe capacitance.

R_T = Termination resistance should be equal to output impedance Z_o of the pulse generator.

V_{EXT} = Test voltage for switching times.

Figure 7. Test circuit for measuring switching times

Table 9. Test data

Input				Load		V_{EXT}		
V_I	f_i	t_W	t_r, t_f	C_L	R_L	t_{PHZ}, t_{PZH}	t_{PLZ}, t_{PZL}	t_{PLH}, t_{PHL}
3.0 V	≤ 1 MHz	500 ns	≤ 2.5 ns	50 pF	500 Ω	open	7.0 V	open

11 Package outline

SO14: plastic small outline package; 14 leads; body width 3.9 mm **SOT108-1**

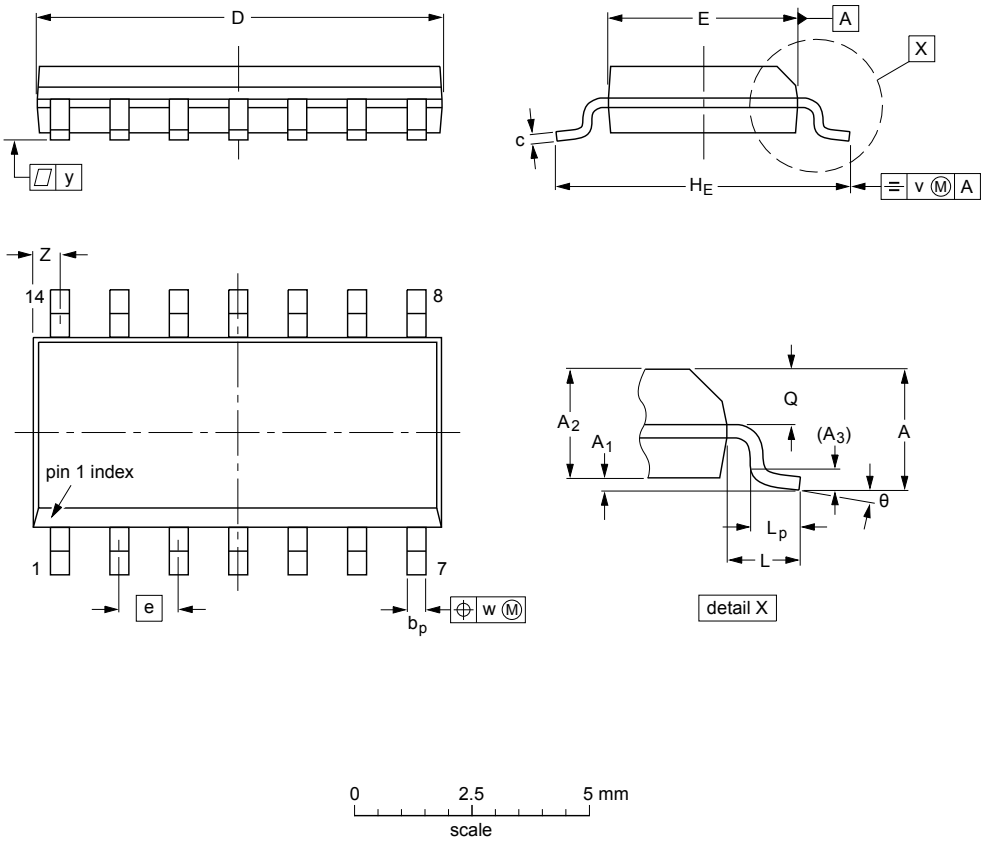

DIMENSIONS (inch dimensions are derived from the original mm dimensions)

UNIT	A max.	A_1	A_2	A_3	b_p	c	D(1)	E(1)	e	H_E	L	L_p	Q	v	w	y	Z(1)	θ
mm	1.75	0.25 0.10	1.45 1.25	0.25	0.49 0.36	0.25 0.19	8.75 8.55	4.0 3.8	1.27	6.2 5.8	1.05	1.0 0.4	0.7 0.6	0.25	0.25	0.1	0.7 0.3	8° 0°
inches	0.069	0.010 0.004	0.057 0.049	0.01	0.019 0.014	0.0100 0.0075	0.35 0.34	0.16 0.15	0.05	0.244 0.228	0.041	0.039 0.016	0.028 0.024	0.01	0.01	0.004	0.028 0.012	

Note

1. Plastic or metal protrusions of 0.15 mm (0.006 inch) maximum per side are not included.

OUTLINE VERSION	REFERENCES				EUROPEAN PROJECTION	ISSUE DATE
	IEC	JEDEC	JEITA			
SOT108-1	076E06	MS-012				~~99-12-27~~ 03-02-19

Figure 8. Package outline SOT108-1 (SO14)

SSOP14: plastic shrink small outline package; 14 leads; body width 5.3 mm **SOT337-1**

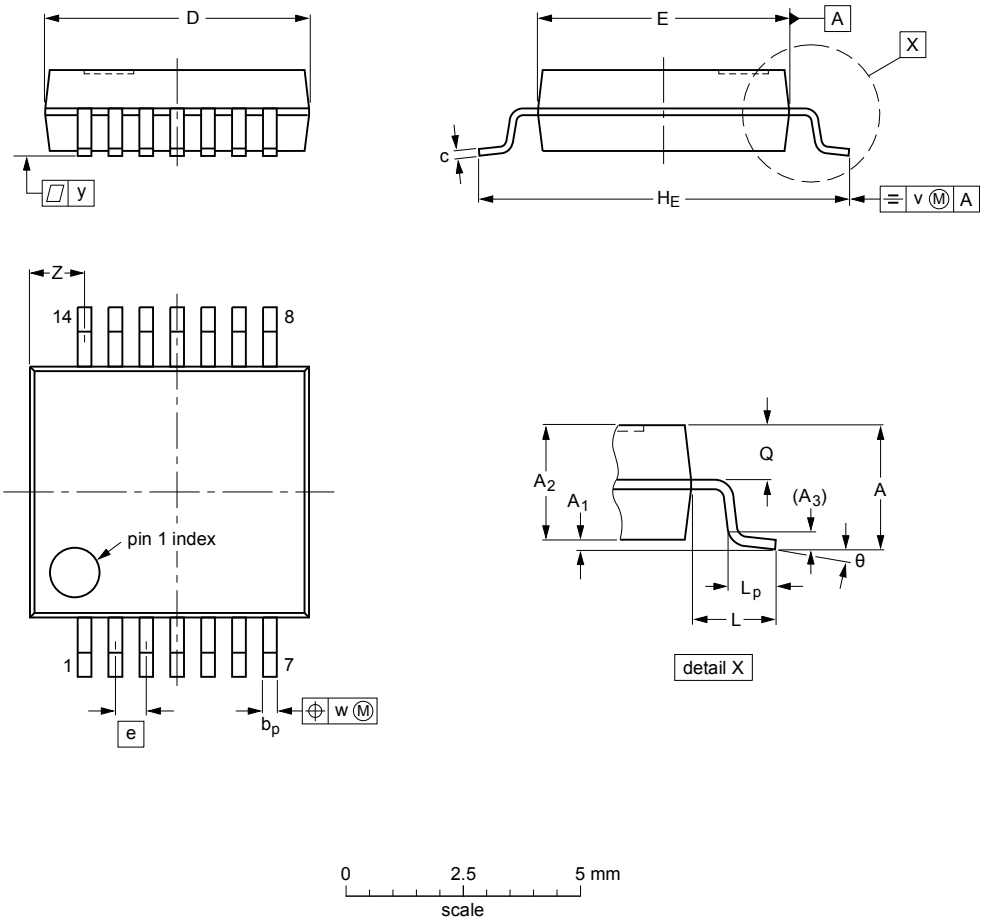

DIMENSIONS (mm are the original dimensions)

UNIT	A max.	A_1	A_2	A_3	b_p	c	D (1)	E (1)	e	H_E	L	L_p	Q	v	w	y	Z (1)	θ
mm	2	0.21 0.05	1.80 1.65	0.25	0.38 0.25	0.20 0.09	6.4 6.0	5.4 5.2	0.65	7.9 7.6	1.25	1.03 0.63	0.9 0.7	0.2	0.13	0.1	1.4 0.9	8° 0°

Note

1. Plastic or metal protrusions of 0.25 mm maximum per side are not included.

OUTLINE VERSION	REFERENCES				EUROPEAN PROJECTION	ISSUE DATE
	IEC	JEDEC	JEITA			
SOT337-1		MO-150				~~99-12-27~~ 03-02-19

Figure 9. Package outline SOT337-1 (SSOP14)

TSSOP14: plastic thin shrink small outline package; 14 leads; body width 4.4 mm **SOT402-1**

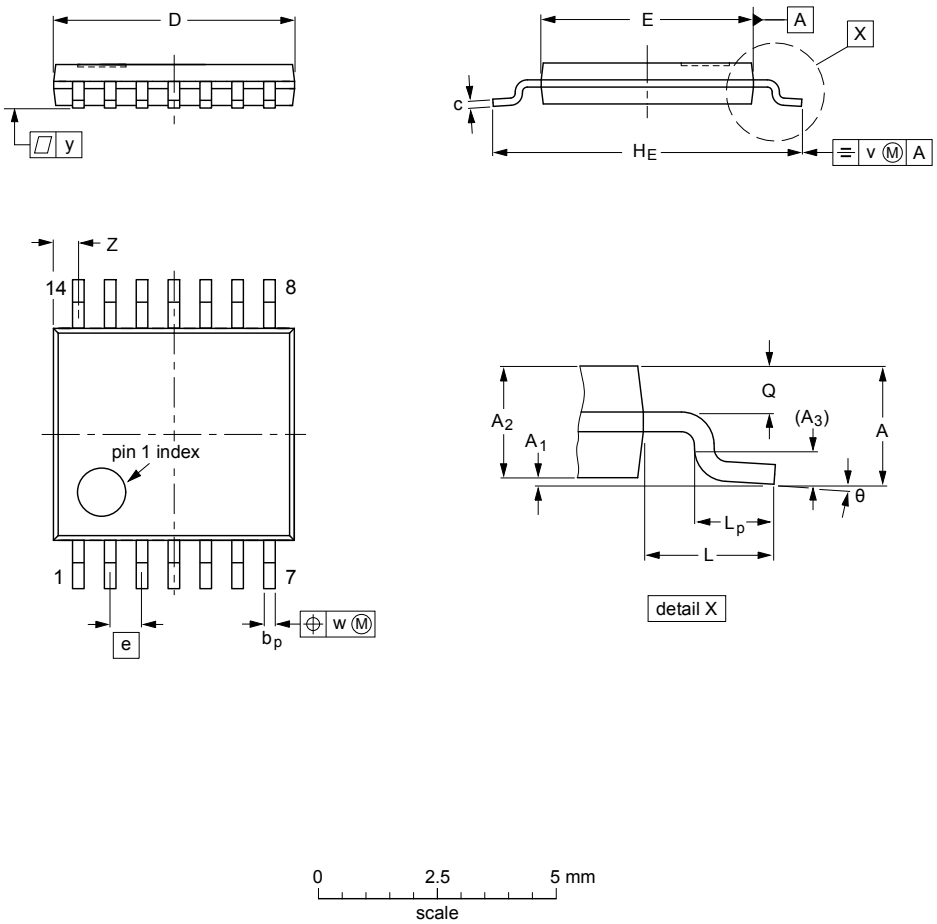

DIMENSIONS (mm are the original dimensions)

UNIT	A max.	A_1	A_2	A_3	b_p	c	D (1)	E (2)	e	H_E	L	L_p	Q	v	w	y	Z (1)	θ
mm	1.1	0.15 0.05	0.95 0.80	0.25	0.30 0.19	0.2 0.1	5.1 4.9	4.5 4.3	0.65	6.6 6.2	1	0.75 0.50	0.4 0.3	0.2	0.13	0.1	0.72 0.38	8° 0°

Notes

1. Plastic or metal protrusions of 0.15 mm maximum per side are not included.
2. Plastic interlead protrusions of 0.25 mm maximum per side are not included.

OUTLINE VERSION	REFERENCES				EUROPEAN PROJECTION	ISSUE DATE
	IEC	JEDEC	JEITA			
SOT402-1		MO-153				~~99-12-27~~ 03-02-18

Figure 10. Package outline SOT402-1 (TSSOP14)

12 Abbreviations

Table 10. Abbreviations

Acronym	Description
BiCMOS	Bipolar Complementary Metal Oxide Semiconductor
DUT	Device Under Test
ESD	ElectroStatic Discharge
MIL	Military
MM	Machine Model

13 Revision history

Table 11. Revision history

Document ID	Release date	Data sheet status	Change notice	Supersedes
74ABT126 v.5	20170404	Product data sheet	-	74ABT126 v.4
Modifications:	• The format of this data sheet has been redesigned to comply with the identity guidelines of Nexperia. • Legal texts have been adapted to the new company name where appropriate.			
74ABT126 v.4	20050217	Product data sheet	-	74ABT126 v.3
Modifications:	• The format of this data sheet has been redesigned to comply with the new presentation andinformation standard of Philips Semiconductors. • Section 2: modified ‘JEDEC Std 17’ into ‘JESD78’. • Table 7: changed min value of t_{PZH} from 1.9 ns into 1.5 ns for both conditions V_{CC} = 5.0 V at T_{amb} = 25 °C and V_{CC} = 5.0 V ± 0.5 V at T_{amb} = -40 °C to +85 °C.			
74ABT126 v.3	20021213	Product specification	-	74ABT126 v.2
74ABT126 v.2	19980116	Product specification	-	74ABT126 v.1
74ABT126 v.1	-	-	-	-

14 Legal information

14.1 Data sheet status

Document status[1][2]	Product status[3]	Definition
Objective [short] data sheet	Development	This document contains data from the objective specification for product development.
Preliminary [short] data sheet	Qualification	This document contains data from the preliminary specification.
Product [short] data sheet	Production	This document contains the product specification.

[1] Please consult the most recently issued document before initiating or completing a design.
[2] The term 'short data sheet' is explained in section "Definitions".
[3] The product status of device(s) described in this document may have changed since this document was published and may differ in case of multiple devices. The latest product status information is available on the Internet at URL http://www.nexperia.com.

14.2 Definitions

Draft — The document is a draft version only. The content is still under internal review and subject to formal approval, which may result in modifications or additions. Nexperia does not give any representations or warranties as to the accuracy or completeness of information included herein and shall have no liability for the consequences of use of such information.

Short data sheet — A short data sheet is an extract from a full data sheet with the same product type number(s) and title. A short data sheet is intended for quick reference only and should not be relied upon to contain detailed and full information. For detailed and full information see the relevant full data sheet, which is available on request via the local Nexperia sales office. In case of any inconsistency or conflict with the short data sheet, the full data sheet shall prevail.

Product specification — The information and data provided in a Product data sheet shall define the specification of the product as agreed between Nexperia and its customer, unless Nexperia and customer have explicitly agreed otherwise in writing. In no event however, shall an agreement be valid in which the Nexperia product is deemed to offer functions and qualities beyond those described in the Product data sheet.

14.3 Disclaimers

Limited warranty and liability — Information in this document is believed to be accurate and reliable. However, Nexperia does not give any representations or warranties, expressed or implied, as to the accuracy or completeness of such information and shall have no liability for the consequences of use of such information. Nexperia takes no responsibility for the content in this document if provided by an information source outside of Nexperia. In no event shall Nexperia be liable for any indirect, incidental, punitive, special or consequential damages (including - without limitation - lost profits, lost savings, business interruption, costs related to the removal or replacement of any products or rework charges) whether or not such damages are based on tort (including negligence), warranty, breach of contract or any other legal theory. Notwithstanding any damages that customer might incur for any reason whatsoever, Nexperia's aggregate and cumulative liability towards customer for the products described herein shall be limited in accordance with the Terms and conditions of commercial sale of Nexperia.

Right to make changes — Nexperia reserves the right to make changes to information published in this document, including without limitation specifications and product descriptions, at any time and without notice. This document supersedes and replaces all information supplied prior to the publication hereof.

Suitability for use — Nexperia products are not designed, authorized or warranted to be suitable for use in life support, life-critical or safety-critical systems or equipment, nor in applications where failure or malfunction of an Nexperia product can reasonably be expected to result in personal injury, death or severe property or environmental damage. Nexperia and its suppliers accept no liability for inclusion and/or use of Nexperia products in such equipment or applications and therefore such inclusion and/or use is at the customer's own risk.

Applications — Applications that are described herein for any of these products are for illustrative purposes only. Nexperia makes no representation or warranty that such applications will be suitable for the specified use without further testing or modification. Customers are responsible for the design and operation of their applications and products using Nexperia products, and Nexperia accepts no liability for any assistance with applications or customer product design. It is customer's sole responsibility to determine whether the Nexperia product is suitable and fit for the customer's applications and products planned, as well as for the planned application and use of customer's third party customer(s). Customers should provide appropriate design and operating safeguards to minimize the risks associated with their applications and products. Nexperia does not accept any liability related to any default, damage, costs or problem which is based on any weakness or default in the customer's applications or products, or the application or use by customer's third party customer(s). Customer is responsible for doing all necessary testing for the customer's applications and products using Nexperia products in order to avoid a default of the applications and the products or of the application or use by customer's third party customer(s). Nexperia does not accept any liability in this respect.

Limiting values — Stress above one or more limiting values (as defined in the Absolute Maximum Ratings System of IEC 60134) will cause permanent damage to the device. Limiting values are stress ratings only and (proper) operation of the device at these or any other conditions above those given in the Recommended operating conditions section (if present) or the Characteristics sections of this document is not warranted. Constant or repeated exposure to limiting values will permanently and irreversibly affect the quality and reliability of the device.

Terms and conditions of commercial sale — Nexperia products are sold subject to the general terms and conditions of commercial sale, as published at http://www.nexperia.com/profile/terms, unless otherwise agreed in a valid written individual agreement. In case an individual agreement is concluded only the terms and conditions of the respective agreement shall apply. Nexperia hereby expressly objects to applying the customer's general terms and conditions with regard to the purchase of Nexperia products by customer.

No offer to sell or license — Nothing in this document may be interpreted or construed as an offer to sell products that is open for acceptance or the grant, conveyance or implication of any license under any copyrights, patents or other industrial or intellectual property rights.

Export control — This document as well as the item(s) described herein may be subject to export control regulations. Export might require a prior authorization from competent authorities.

Non-automotive qualified products — Unless this data sheet expressly states that this specific Nexperia product is automotive qualified, the product is not suitable for automotive use. It is neither qualified nor tested in accordance with automotive testing or application requirements. Nexperia accepts no liability for inclusion and/or use of non-automotive qualified products in automotive equipment or applications. In the event that customer uses the product for design-in and use in automotive applications to automotive specifications and standards, customer (a) shall use the product without Nexperia's warranty of the product for such automotive applications, use and specifications, and (b) whenever customer uses the product for automotive applications beyond Nexperia's specifications such use shall be solely at customer's own risk, and (c) customer fully indemnifies Nexperia for any liability, damages or failed product claims resulting from customer design and use of the product for automotive applications beyond Nexperia's standard warranty and Nexperia's product specifications.

Translations — A non-English (translated) version of a document is for reference only. The English version shall prevail in case of any discrepancy between the translated and English versions.

14.4 Trademarks

Notice: All referenced brands, product names, service names and trademarks are the property of their respective owners.

Contents

1 General description 1
2 Features and benefits 1
3 Ordering information 1
4 Functional diagram 2
5 Pinning information 2
5.1 Pinning 2
5.2 Pin description 2
6 Functional description 3
7 Limiting values 3
8 Recommended operating conditions 3
9 Static characteristics 4
10 Dynamic characteristics 5
10.1 Waveforms and test circuit 6
11 Package outline 8
12 Abbreviations 11
13 Revision history 11
14 Legal information 12

For more information, please visit: http://www.nexperia.com
For sales office addresses, please send an email to: salesaddresses@nexperia.com

Date of release: 4 April 2017
Document identifier: 74ABT126