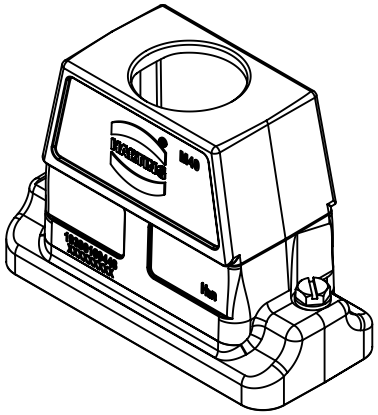

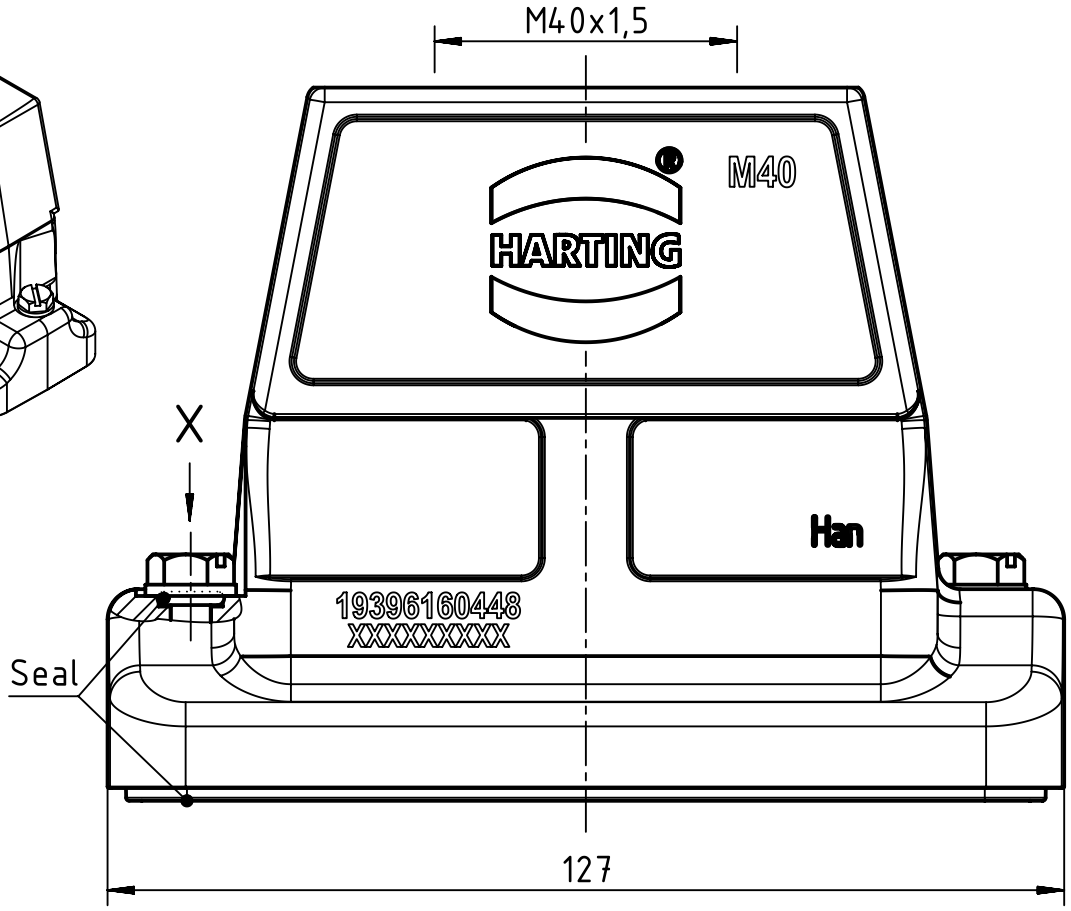

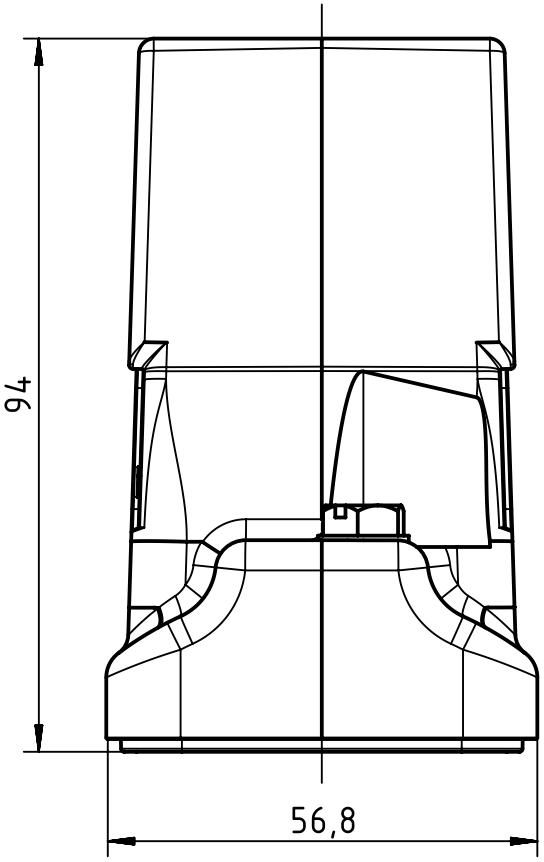

X (2:1)

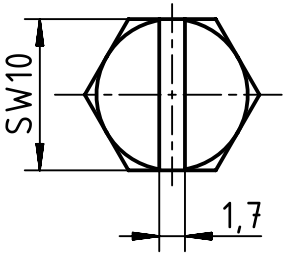

Panel cut out (1:2)

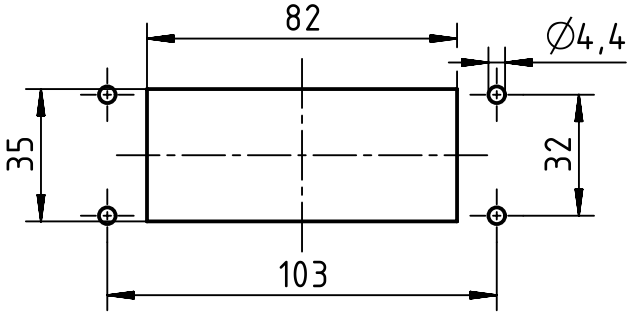

All Dimensions in mm Original Size DIN A4	Scale 1:1	Free size tol.		Ref. Sub.	
All rights reserved Department EL PD - CN	Created by LONGL	Inspected by WENE	Standardisation SCHMIDTM	Date 2017-03-20	State Final Release
	Title Han 16HP Direct/B-HTE-M40				Doc-Key / ECM-Nr. 100632927/UGD/005/D 500000116961
HARTING (Zhuhai) Manufacturing Co., Ltd. 519085 Zhuhai, China	Type TB	Number 19 39 616 0448		Rev. D	Page 1/1

A4