DATA CONTAINED IN THIS DOCUMENT IS PROPRIETARY TO TROMPETER ELECTRONICS INC. AND SHALL NOT BE DISCLOSED, COPIED OR USED FOR PROCUREMENT OR MANUFACTURE WITHOUT EXPRESS WRITTEN PERMISSION OF TROMPETER ELECTRONICS INC.

REVISIONS		310-0036	SH 1
REV	DESCRIPTION	DATE	APPROVED
V	REVISED PER ECO 15485	6/14/04	WJ

DASH NO	CABLES ACCOMMODATED	ASSEMBLE PER
-23	275-3930, MICRODOT	TAI-127
-24	202-3934, MICRODOT	TAI-125
-24A	9530A5117, RAYCHEM	TAI-127
-27	202-3927, MICRODOT (5) 73-1317911-1, SYLVANIA	TAI-125
-29	TWC-124-1A TWC-78-1	TAI-125
-30	8441, BELDEN (4) 761A, W.E.CO.	
-32	TRC-50-1	TAI-127
-33	TRC-75-1	
-43	250-4044/250-4045 293-3930 MICRODOT	TAI-174
-45	10602, RAYCHEM	TAI-125
-47	M17/176-00002 (5)	
-49	TWAC-78-1F2 (5)	
-56	GC875GC1, GRUMMAN	TAI-174
-57	GC875GB1, GRUMMAN	
-58	GC875TM24H, GRUMMAN	TAI-125
-55	TWCP-124-3	

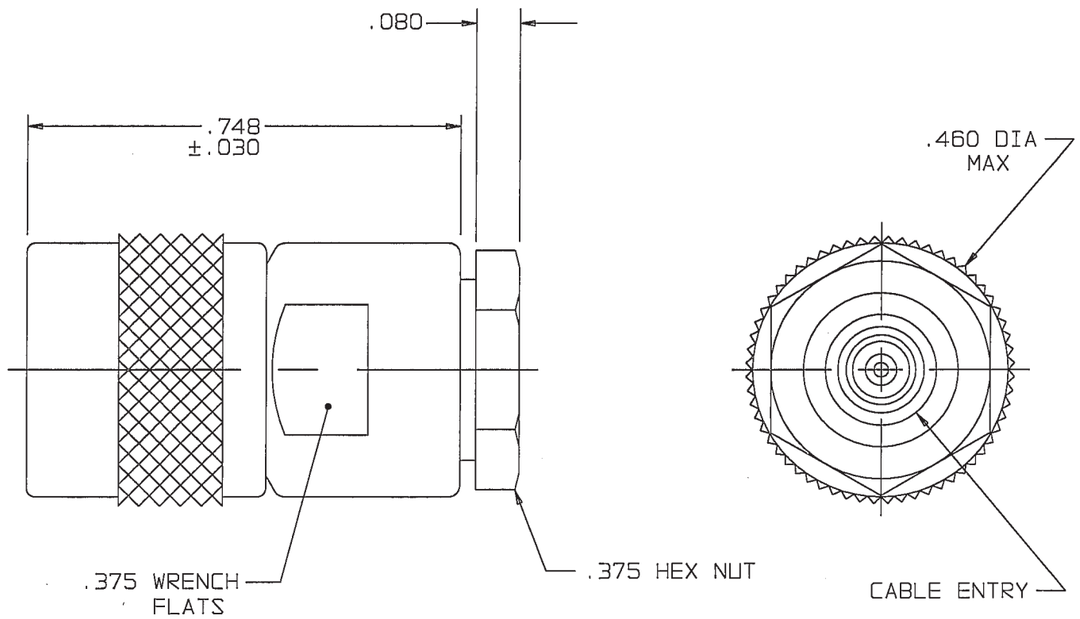

-29 SHOWN

(5) .187 LG JACKET SLITS MAY BE REQUIRED FOR EASE OF ASSY

(4) NOT WRENCH CRIMP

3. CONCENTRIC TWINAX/TRIAX SUBMINIATURE 3-LUG TRS PLUG

2. FINISH: TFS-1A (NICKEL)

1. ALL DIM ARE IN INCHES

RED INDICATES ORIGINAL

310-0026	INTERPRET DRAWING PER MIL-STD-100 DIMENSIONS ARE IN INCHES AND INCLUDE FINISH THICKNESS UNLESS OTHERWISE SPECIFIED		TOL: UNLESS SPECIFIED .XX ±.01 .XXX ±.005 .XXXX±.0010 ANGLES± 0° 30'	TROMPETER RF connectivity a cinch connectivity solutions brand	
305-0374	DRAWN AAH	DATE 6-10-04	MATERIAL:	TITLE: PL155	
3-0040	CHECKED [illegible]	6-10-04			
3-0029	QUALITY WJ	6/14/04	FINISH:	SIZE B / CAGE CODE 14949 / DRAWING NO. 310-0036 / REV. V	
205-0029	MANUF WJ	6/14/04			
1-0451	APPROVED WJ	6/14/04	DO NOT SCALE DWG	SCALE 4/1 / DATE: 6/20/75 / SHEET 1C	
NEXT ASSY	CAD FILE NO. 310-0036V				