DWG NO.	SH	CUSTOMER	CUSTOMER P/N	CUST. REV
315-0011	1			

DATA CONTAINED IN THIS DOCUMENT IS PROPRIETARY TO EMERSON CONNECTIVITY SOLUTIONS AND SHALL NOT BE DISCLOSED, COPIED OR USED FOR PROCUMENT OR MANUFACTURE WITHOUT EXPRESS WRITTEN PERMISSION

REVISIONS

REV	DESCRIPTIONS	DATE	APPROVED
AD	ECO 52460	6/18/10	CSM

TABLE 1

DASH NO	CABLES ACCOMMODATED	A DIM	B DIM	C FLATS	D FLATS	E DIA	CABLE ENTRY DIA	ASSEMBLE PER	CABLE TYPE
-7	TRC-50-2 TRC-75-2	1.165	.096	.438	.438	.500	.274	TA1-189	TRIAX
-8	8227, BELDEN	1.740	.130	.625	.688	.750	.345	TA1-103	TWINAX
-9	TWC-78-2 TWC-124-2	1.165	.096	.438	.438	.500	.285	TA1-102	TWINAX
-A9 △3	BL782, TIMES BL982, TIMES BL1242, TIMES		△3	△3					
-10	RG-22 754E, AT&T	1.740	.130	.625	.688	.750	.455	TA1-103	TWINAX
-11	760A, AT&T						.347		
-12	16PEVL, AT&T V1-AL, GENERAL						.485	TA1-128	
-13	TRF-59, TIMES						.362	TA1-129	TRIAX
-13A	8232, BELDEN						.352	TA1-165	
-14	8233, BELDEN						.490	TA1-129	
-23	250-3884, MICRODOT	1.165	.096	.438	.438	.500	.183	TA1-189	
-24	202-3934, MICRODOT						.191	TA1-102	TWINAX
-24A	9530A5117, RAYCHEM						.200	TA1-189	TRIAX
-25	T-43M, GENERAL						.285	TA1-102	TWINAX
-25A	5021H5331, RAYCHEM							TA1-189	TRIAX
-26	7028A5518, RAYCHEM						.191		
-27	T19TPSJ2619EN, WOVEN 202-3927, MICRODOT 202-3942, MICRODOT						.145	TA1-102	TWINAX
-29	TWC-78-1/TWC-124-1A						.191		
-30	761A, AT&T 8441, BELDEN						.235		
-32	TRC-50-1						.191	TA1-189	TRIAX
-33	TRC-75-1						.217		
-42	21-204, ESSEX 4463, CONSOLIDATED						.300		
-43	250-4044/250-4045 293-3930, MICRODOT						.200		
-45	M27500-22TE2T14 1100-66F, STANDARD						.183	TA1-102	TWINAX
-46	9860, BELDEN	1.740	.130	.625	.688	.750	.475	TA1-103	
-47	M17/176-00002	1.165	.096	.438	.438	.500	.164	TA1-102	
-49	TWAC-78-1F2						.132		
-54	89207, BELDEN	1.740	.130	.625	.688	.750	.323	TA1-103	
-55	89272, BELDEN	1.165	.096	.438	.438	.500	.250	TA1-102	
-56	GC875GC1, GRUMMAN						.191	TA1-189	TRIAX
-57	GC875GB1, GRUMMAN								
-58	GC875TM24H, GRUMMAN						.198	TA1-102	QUADRAX
-59	GC875LN1, GRUMMAN						.217	TA1-189	TRIAX
-60	M17/177, THERMATICS 380-10045, BOEING								
-64	7528A5314, RAYCHEM						.183		

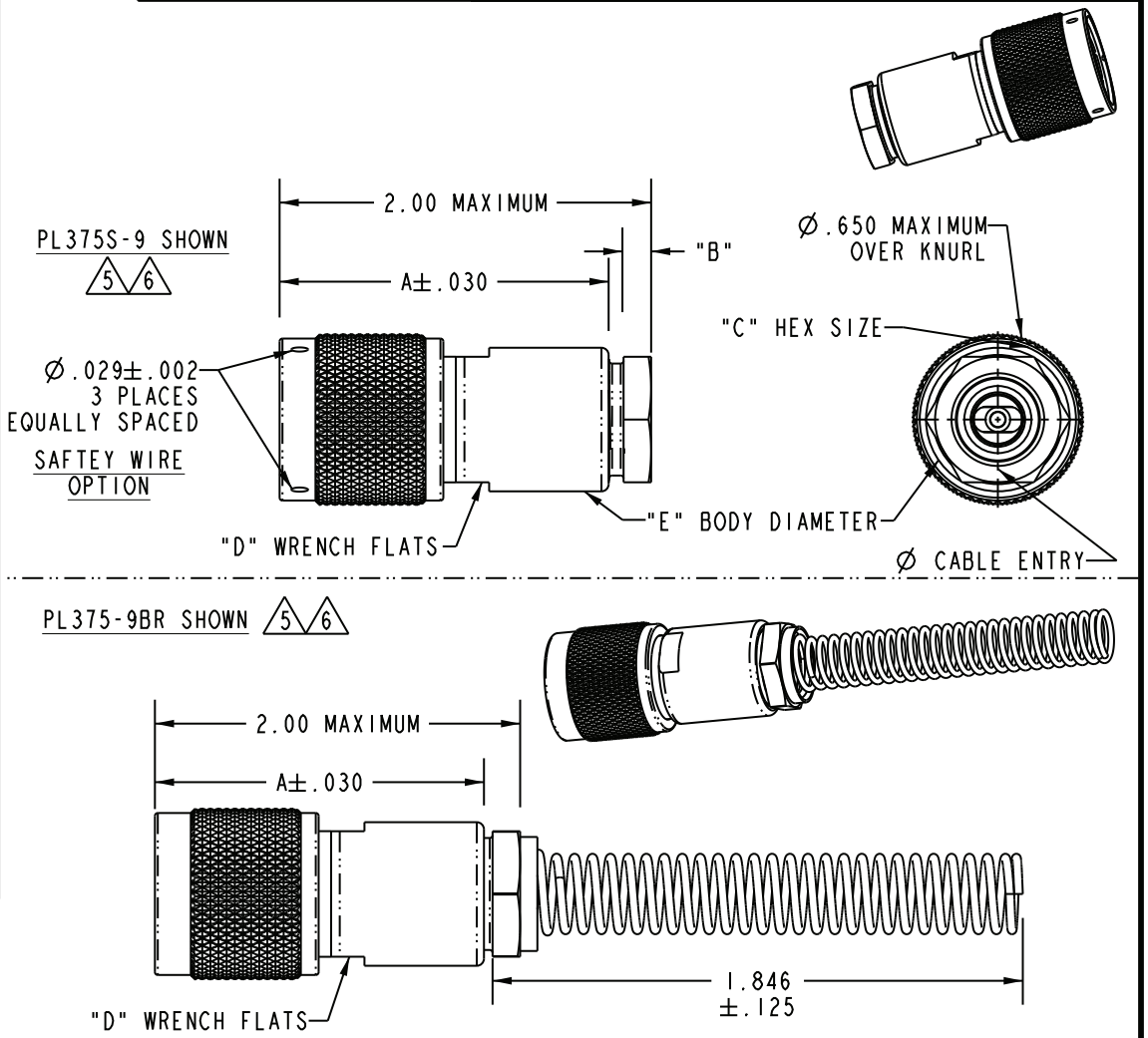

△6 IF SAFETY WIRE TYPE & BEND RELIEF SPRING REQD ADD SUFFIX "SBR" TO MODEL NO (NOT AVAILABLE WITH CABLE GROUPS -8, -10, -11, -12, -13,-13A, -14, -46, & -54)

△5 IF BEND RELIEF SPRING REQD (SEE FIG 2) ADD SUFFIX "BR" TO MODEL NO (NOT AVAILABLE WITH CABLE GROUPS -8, -10, -11, -12, -13, -13A, -14, -46, & -54)

4. IF SAFETY WIRE TYPE REQD ADD SUFFIX "S" TO MODEL NO (PL375S)

△3 CLAMP NUT OMITTED

2. CONCENTRIC TWINAX/TRIAX TRT CABLE PLUG

△1 FINISH: TFS-1A (NICKEL)

NOTES: UNLESS OTHERWISE SPECIFIED.

7. EXAMPLE OF COMPLETE MODEL NO:

PL375 S -7 BR

- BASIC MODEL NO
- SAFETY WIRE TYPE (OMIT IF NOT REQD)
- DASH NO (CABLE GROUP, TABLE 1)
- BEND RELIEF (OMIT IF NOT REQD)

N/A	
BLANK LENGTH (REF. ONLY)	
N/A	
SURFACE AREA	

INTERPRET DRAWING PER MIL-STD-100. DIMENSIONS ARE IN INCHES AND INCLUDE FINISH THICKNESS UNLESS OTHERWISE SPECIFIED.

TOL: UNLESS SPECIFIED. .XX ± .02 .XXX ± .010 .XXXX ± .0010 ANGLE ± 1° 00' CRITICAL

DRN	BPK	7/29/11
CHK	CSM	8/1/11
QUALITY		
MANUF		
APPROVED		
PRO/E FILE NO.	315-0011	

MATERIAL:

FINISH: △1

DO NOT SCALE DWG

cinch CONNECTIVITY SOLUTIONS a bel group
Cinch Connectivity Solutions
299 Johnson Ave. Ste. 100
Waseca, MN 56093
1-800-247-8256

TITLE: PL375 / PL375S PL375BR / PL375SBR

SIZE	CAGE CODE	DRAWING NO.	REV.
A	14949	315-0011	AD

SCALE	DATE	SHEET
1/1	5/23/73	1 OF 2