DATA CONTAINED IN THIS DOCUMENT IS PROPRIETARY TO TROMPETER ELECTRONICS INC. AND SHALL NOT BE DISCLOSED, COPIED OR USED FOR PROCUREMENT OR MANUFACTURE WITHOUT EXPRESS WRITTEN PERMISSION OF TROMPETER ELECTRONICS INC.

REVISIONS		310-0054	SH 1
REV	DESCRIPTION	DATE	APPROVED
AD	REVISED PER ECO 14825	11/26/02	AAH

RED INDICATES ORIGINAL

TABLE 1

DASH NO	CABLES ACCOMMODATED	A HEX	B DIM	C MAX	ASSEMBLE PER
-201	M17/176-00002	.344	.030	1.70	TAI-166
-202	TWC-78-1				
-203	TWC-124-1A				
-204	10602 RAYCHEM				
-205	TWAC-78-1F2				
-206	78260013,0 RAYCHEM				
-207	83310 BELDEN				
-208	202-3927 MICRODOT				
-209	202-3942 MICRODOT				
-210	8451 BELDEN				
-211	202-3934 MICRODOT			1.44	TAI-138
-212	2524E011,4 RAYCHEM				
-213	TWC-78-2				
-214	TWC-124-2				
-215	BL982, TIMES				
-216	BL1242, TIMES				
-217	GC875TM24,H GRUMMAN			1.70	TAI-166
-218	EDP22188B, RAYCHEM				
-219	2526D111,4 RAYCHEM				
-220	GC875RR1, GRUMMAN				
-221	10614, RAYCHEM				
-222	10613, RAYCHEM				
-223	HMS2-1149, HUGHES				
-224	TWCP-124-3			1.44	TAI-138
-225	PS665PL, PRIME STOCK				
-301	GC875GC1, GRUMMAN			1.70	TAI-168
-302	GC875GB1, GRUMMAN				
-303	7528A5314, RAYCHEM				
-304					
-305	M17/177-00001, THERMATICS				
-306	TRC-50-2 M17/134-00002				TAI-218
-307	TRC-75-1				TAI-168
-308	TRC-75-2				TAI-218
-309	TRC-50-1				TAI-168

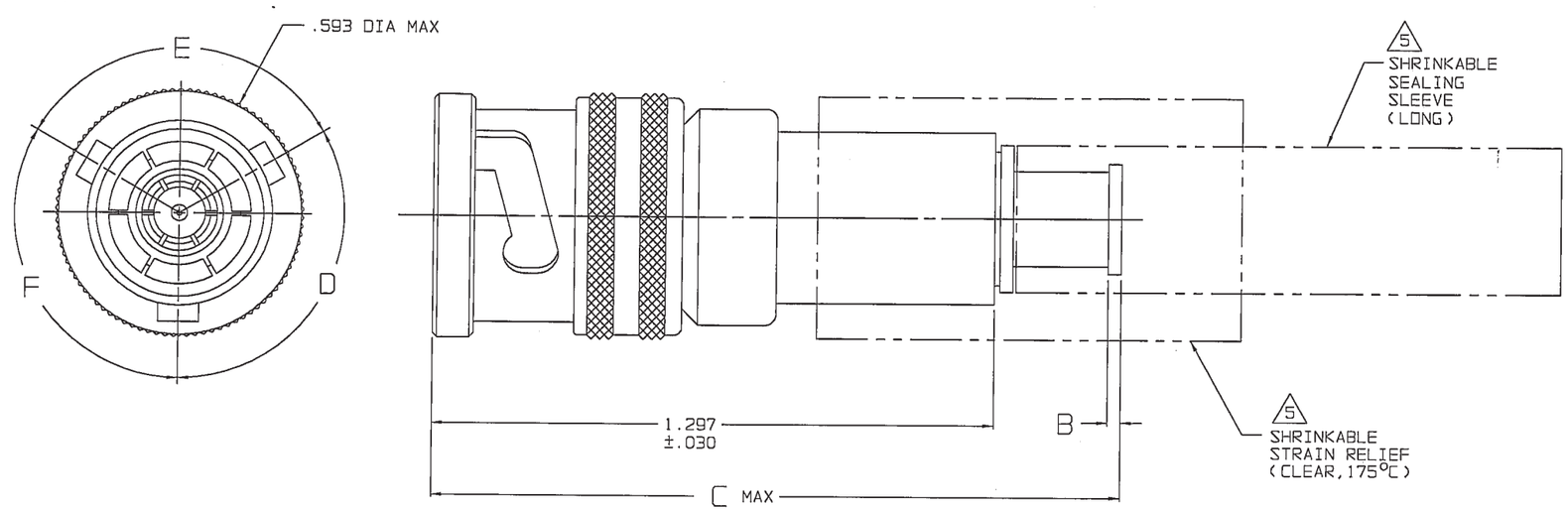

-202 SHOWN

6. FOR TOOL CRIMP CONNECTOR QUALIFIED TO MIL-C-49142, SEE DRAWING 3-0285 (PL75MC)

5. 1 SHRINKABLE STRAIN RELIEF AND/OR SHRINKABLE SEALING SLEEVE SUPPLIED LOOSE AS FOLLOWS:

   a. CABLE GROUPS -201 THROUGH -210, -217 THROUGH -223, -301, -302, -303, -305, -307 & -309

      1 SHRINKABLE STRAIN RELIEF (1.00 LONG)
      1 SHRINKABLE SEALING SLEEVE (1.25 LONG)

   b. CABLE GROUPS -211 THROUGH -216, -224, -225, -306 & -308

      1 SHRINKABLE STRAIN RELIEF (1.75 LONG)

4. EXAMPLE OF COMPLETE MODEL NO:

   PL75C T - 201

   BASIC MODEL NO
   POLARIZATION LETTER NONE REQD FOR STD POLARIZATION (SEE TABLE 2)
   CABLE GROUP DASH NO (SEE TABLE 1)

3. CONCENTRIC TWINAX/TRIAX 3-LUG TRB, FULL CRIMP CABLE PLUG

2. FINISH: TFS-1A (NICKEL)

1. ALL DIMENSIONS ARE IN INCHES

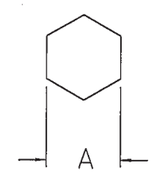

RECOMMENDED
HEX CRIMP
SCALE: 2/1

TABLE 2
POLARIZATION CHART

KEY LETTER	D DEGREES	E DEGREES	F DEGREES	COLOR BAND
NONE	120°	120°	120°	NONE
T	100°	150°	110°	RED
U	120°	130°	110°	ORANGE
V	115°	130°	115°	YELLOW
W	125°	110°	125°	GREEN
X	130°	100°	130°	BLUE
Y	110°	140°	110°	VIOLET
Z	100°	160°	100°	GRAY
S	135°	135°	90°	WHITE

INTERPRET DRAWING PER MIL-STD-100
DIMENSIONS ARE IN INCHES AND INCLUDE FINISH THICKNESS UNLESS OTHERWISE SPECIFIED

TOL: UNLESS SPECIFIED
.XX
.XXX ±.005
.XXXX
ANGLES

DRAWN	AAH	11-22-02
CHECKED	T. Klug	11-22-02
QUALITY		11/26/02
MANUFACTURING		11/26/02
APPROVED	AAH / Mark	11/25/02
CAD FILE NO.	310-0054AD	

MATERIAL:

FINISH:

NEXT ASSY

DO NOT SCALE DWG

TROMPETER RF connectivity
a cinch connectivity solutions brand

TITLE: PL75C/T/U/V W/X/Y/Z/S

SIZE	CAGE CODE	DRAWING NO.	REV.
B	14949	310-0054	AD

SCALE NONE | DATE: 4/10/84 | SHEET 1C