DATA SHEET

74F166
8-bit bidirectional universal shift register

Product specification

1991 Feb 14

IC15 Data Handbook

Philips
Semiconductors

PHILIPS

8-bit bidirectional universal shift register 74F166

FEATURES

- High impedance NPN base inputs for reduced loading (20µA in high and low states)
- Synchronous parallel to serial applications
- Synchronous serial data input for easy expansion
- Clock enable for ”do nothing” mode
- Asynchronous master reset
- Expandable to 16 bits in 8–bit increments
- Industrial temperature range available (–40°C to +85°C)

DESCRIPTION

The 74F166 is a high speed 8–bit shift register that has fully synchronous serial parallel data entry selected by an active low parallel enable ($\overline{PE}$) input. When the $\overline{PE}$ is low one setup time before the low–to–high clock transition, parallel data is entered into the register.

When $\overline{PE}$ is high, data is entered into internal bit position Q0 from serial data input (Ds), and the remaining bits are shifted one place to the right (Q0 → Q1 → Q2, etc.) with each positive going clock transition.

For expansion of the register in parallel to serial converters, the Q7 output is connected to the Ds input of the succeeding stage. The clock input is gated OR structure which allows one input to be used as an active–low clock enable ($\overline{CE}$) input. The pin assignment for the CP and $\overline{CE}$ inputs is arbitrary and can be reversed for layout convenience. The low–to–high transition of $\overline{CE}$ input should only take place while the CP is high for predictable operation. A low on the master reset ($\overline{MR}$) input overrides all other inputs and clears the register asynchronously, forcing all bit positions to a low state.

TYPE	TYPICAL f_{max}	TYPICAL SUPPLY CURRENT(TOTAL)
74F166	175MHz	50mA

ORDERING INFORMATION

DESCRIPTION	ORDER CODE		PKG DWG #
	COMMERCIAL RANGE V_{CC} = 5V ±10%, T_{amb} = 0°C to +70°C	INDUSTRIAL RANGE V_{CC} = 5V ±10%, T_{amb} = –40°C to +85°C	
16–pin plastic DIP	N74F166N	I74F166N	SOT38-4
16–pin plastic SO	N74F166D	I74F166D	SOT109-1

INPUT AND OUTPUT LOADING AND FAN OUT TABLE

PINS	DESCRIPTION	74F (U.L.) HIGH/ LOW	LOAD VALUE HIGH/ LOW
D0 – D7	Parallel data inputs	1.0/0.033	20µA/20µA
Ds	Serial data input (shift right)	2.0/0.066	40µA/40µA
CP	Clock input (active rising edge)	1.0/0.033	20µA/20µA
$\overline{CE}$	Clock enable input (active low)	1.0/0.033	20µA/20µA
$\overline{PE}$	Parallel enable input (active low)	1.0/0.033	20µA/20µA
$\overline{MR}$	Master reset input (active low)	2.0/0.066	40µA/40µA
Q7	Data output	50/33	1.0mA/20mA

Note to input and output loading and fan out table

1. One (1.0) FAST unit load is defined as: 20µA in the high state and 0.6mA in the low state.

PIN CONFIGURATION

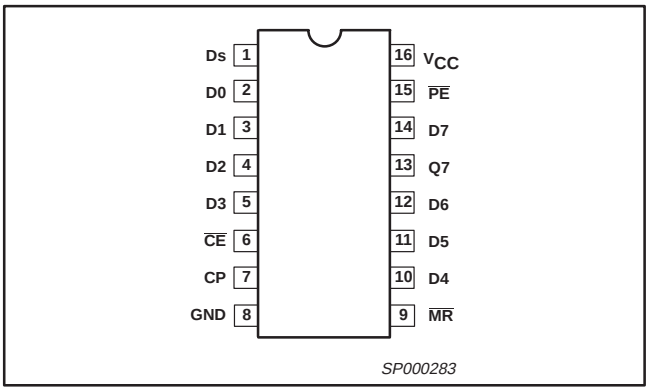

IEC/IEEE SYMBOL

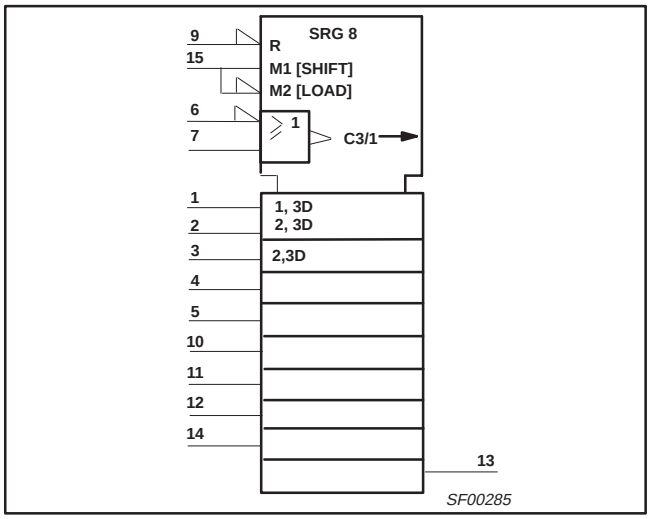

LOGIC SYMBOL

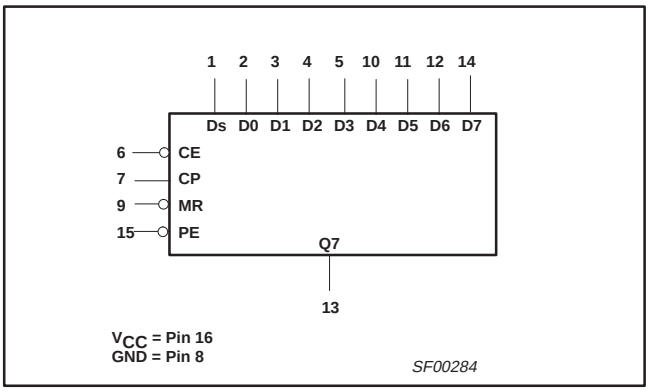

FUNCTION TABLE

INPUTS					Qn REGISTER		OUTPUT	OPERATING MODE
$\overline{PE}$	$\overline{CE}$	CP	DS	D0 –D7	Q0	Q1 – Q6	Q7	
l	l	↑	X	l – l	L	L – L	L	Parallel load
l	l	↑	X	h – h	H	H – H	H	
h	l	↑	l	X – X	L	q0 – q5	q6	Serial shift
h	l	↑	h	X – X	H	q0 – q5	q6	
X	h	X	X	X – X	qn	q1 – q6	q7	Hold (do nothing)

Notes to function table

1. H = High–voltage level
2. h = High voltage level one setup time before the low–to–high clock transition
3. L = Low–voltage level
4. l = Low voltage level one setup time before the low–to–high clock transition
5. qn = Lower case letters indicate the state of the referenced input (or output) one setup time prior to the low–to–high clock transition
6. X = Don't care
7. ↑ = Low–to–high clock transition

LOGIC DIAGRAM

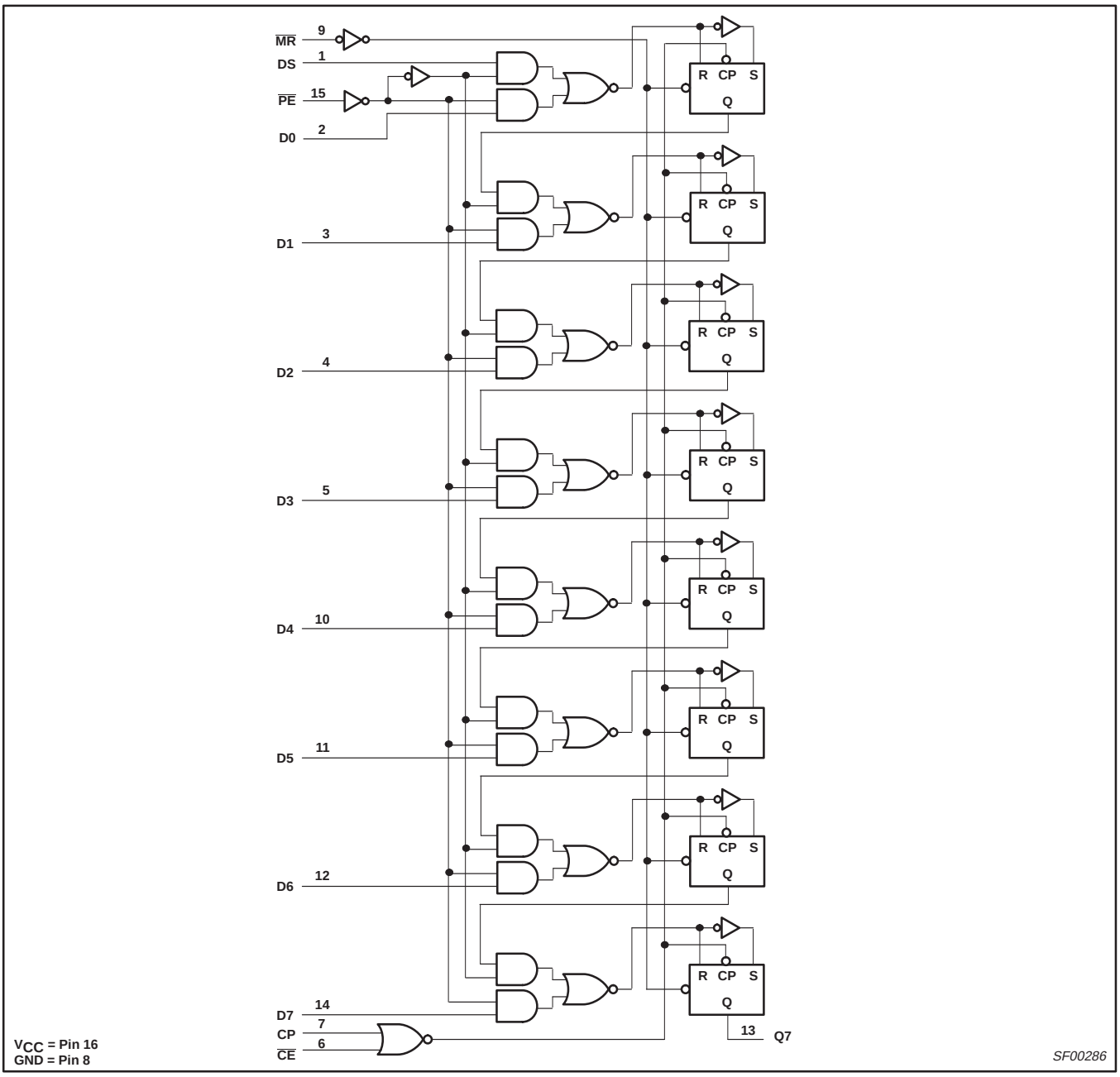

ABSOLUTE MAXIMUM RATINGS

(Operation beyond the limit set forth in this table may impair the useful life of the device. Unless otherwise noted these limits are over the operating free air temperature range.)

SYMBOL	PARAMETER		RATING	UNIT
V_{CC}	Supply voltage		–0.5 to +7.0	V
V_{IN}	Input voltage		–0.5 to +7.0	V
I_{IN}	Input current		–30 to +5	mA
V_{OUT}	Voltage applied to output in high output state		–0.5 to V_{CC}	V
I_{OUT}	Current applied to output in low output state		40	mA
T_{amb}	Operating free air temperature range	Commercial range	0 to +70	°C
		Industrial range	–40 to +85	°C
T_{stg}	Storage temperature range		–65 to +150	°C

RECOMMENDED OPERATING CONDITIONS

SYMBOL	PARAMETER		LIMITS			UNIT
			MIN	NOM	MAX	
V_{CC}	Supply voltage		4.5	5.0	5.5	V
V_{IN}	High–level input voltage		2.0			V
V_{IL}	Low–level input voltage				0.8	V
I_{Ik}	Input clamp current				–18	mA
I_{OH}	High–level output current				–1	mA
I_{OL}	Low–level output current				20	mA
T_{amb}	Operating free air temperature range	Commercial range	0		+70	°C
		Industrial range	–40		+85	°C

DC ELECTRICAL CHARACTERISTICS

(Over recommended operating free-air temperature range unless otherwise noted.)

SYMBOL	PARAMETER			TEST CONDITIONS[1]			LIMITS MIN	LIMITS TYP[2]	LIMITS MAX	UNIT
V_{OH}	High–level output voltage			V_{CC} = MIN, V_{IL} = MAX, V_{IH} = MIN	I_{OH} = MAX	±10%V_{CC}	2.5			V
						±5%V_{CC}	2.7	3.4		V
V_{OL}	Low–level output voltage			V_{CC} = MIN, V_{IL} = MAX, V_{IH} = MIN	I_{OL} = MAX	±10%V_{CC}		0.30	0.50	V
						±5%V_{CC}		0.30	0.50	V
V_{IK}	Input clamp voltage			V_{CC} = MIN, I_I = I_{IK}				-0.73	-1.2	V
I_I	Input current at maximum input voltage		others	V_{CC} = 0.0V, V_I = 7.0V					100	µA
			$\overline{CE}$, CP[3]							
I_{IH}	High–level input current	others		V_{CC} = MAX, V_I = 2.7V					20	µA
		$\overline{MR}$, Ds							40	µA
		Industrial only	others						40	µA
			$\overline{MR}$, Ds						80	µA
I_{IL}	Low–level input current		others	V_{CC} = MAX, V_I = 0.5V					-20	µA
			$\overline{MR}$, Ds						-40	µA
I_{OS}	Short–circuit output current[4]			V_{CC} = MAX			-60		-150	mA
I_{CC}	Supply current (total)			V_{CC} = MAX, $\overline{PE}$ = $\overline{CE}$ = Dn = GND, $\overline{MR}$ = Ds = 4.5V, CP = ↑				50	70	mA

Notes to DC electrical characteristics

1. For conditions shown as MIN or MAX, use the appropriate value specified under recommended operating conditions for the applicable type.
2. All typical values are at V_{CC} = 5V, T_{amb} = 25°C.
3. When testing CP, $\overline{CE}$ must remain in high state, whereas CP must remain in high state when testing $\overline{CE}$.
4. Not more than one output should be shorted at a time. For testing I_{OS}, the use of high-speed test apparatus and/or sample-and-hold techniques are preferable in order to minimize internal heating and more accurately reflect operational values. Otherwise, prolonged shorting of a high output may raise the chip temperature well above normal and thereby cause invalid readings in other parameter tests. In any sequence of parameter tests, I_{OS} tests should be performed last.

AC ELECTRICAL CHARACTERISTICS

SYMBOL	PARAMETER	TEST CONDITION	LIMITS T_{amb} = +25°C, V_{CC} = +5.0V, C_L = 50pF, R_L = 500Ω MIN	TYP	MAX	T_{amb} = 0°C to +70°C, V_{CC} = +5.0V ± 10%, C_L = 50pF, R_L = 500Ω MIN	MAX	T_{amb} = –40°C to +85°C, V_{CC} = +5.0V ± 10%, C_L = 50pF, R_L = 500Ω MIN	MAX	UNIT
f_{max}	Maximum clock frequency	Waveform 1	135	175		110		100		ns
t_{PLH} t_{PHL}	Propagation delay CP to Q7	Waveform 1	5.0 4.0	7.5 6.0	10.0 8.0	5.0 3.5	12.0 9.0	5.0 3.5	13.0 9.0	ns
t_{PHL}	Propagation delay $\overline{MR}$ to Q7	Waveform 2	4.0	6.5	8.5	4.0	9.5	4.0	9.5	ns

AC SETUP REQUIREMENTS

SYMBOL	PARAMETER	TEST CONDITION	LIMITS							UNIT
			T_{amb} = +25°C V_{CC} = +5.0V C_L = 50pF, R_L = 500Ω			T_{amb} = 0°C to +70°C V_{CC} = +5.0V ± 10% C_L = 50pF, R_L = 500Ω		T_{amb} = –40°C to +85°C V_{CC} = +5.0V ± 10% C_L = 50pF, R_L = 500Ω		
			MIN	TYP	MAX	MIN	MAX	MIN	MAX	
t_{su} (H) t_{su}(L)	Setup time, high or low Dn, Ds to CP, $\overline{CE}$	Waveform 3	3.0 2.5			4.0 3.0		4.0 3.0		ns
t_h (H) t_h (L)	Hold time, high or low Dn, Ds to CP	Waveform 3	0.0 0.0			1.0 0.0		1.0 0.0		ns
t_h (H) t_h (L)	Hold time, high or low Dn, Ds to $\overline{CE}$	Waveform 3	1.5 0.0			2.0 0.0		2.0 0.0		ns
t_{su}(L)	Setup time, low $\overline{CE}$ to CP	Waveform 3	5.0			6.0		6.0		ns
t_h (H)	Hold time, high $\overline{CE}$ to CP	Waveform 3	0.0			0.0		0.0		ns
t_{su} (H) t_{su}(L)	Setup time, high or low $\overline{PE}$ to CP, $\overline{CE}$	Waveform 3	3.0 3.0			4.0 4.0		4.0 6.0		ns
t_h (H) t_h (L)	Hold time, high or low $\overline{PE}$ to CP	Waveform 3	0.0 0.0			0.0 0.0		0.0 0.0		ns
t_w (H) t_w (L)	CP pulse width, high or low	Waveform 1	3.0 4.5			3.5 5.0		3.5 6.0		ns
t_w (L)	$\overline{MR}$ pulse width, low	Waveform 2	4.0			4.0		4.0		ns
t_{rec}	Recovery time, $\overline{MR}$ to CP	Waveform 2	4.0			4.5		4.5		ns

AC WAVEFORMS

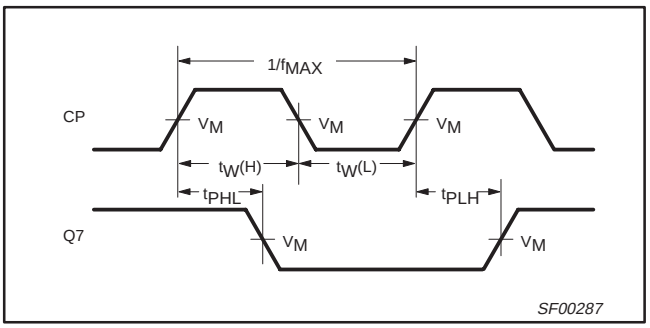

Waveform 1. Propagation delay for clock input to output, clock pulse width, and maximum clock frequency

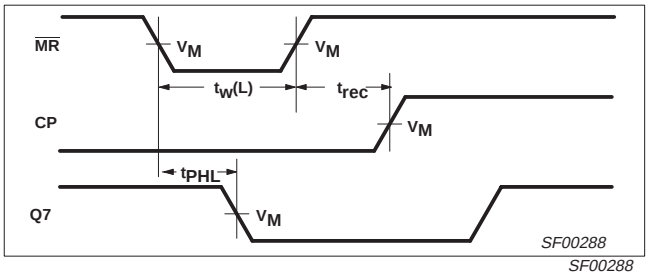

SF00288

Waveform 2. Master reset pulse width, master reset to output delay and master reset to clock recovery time

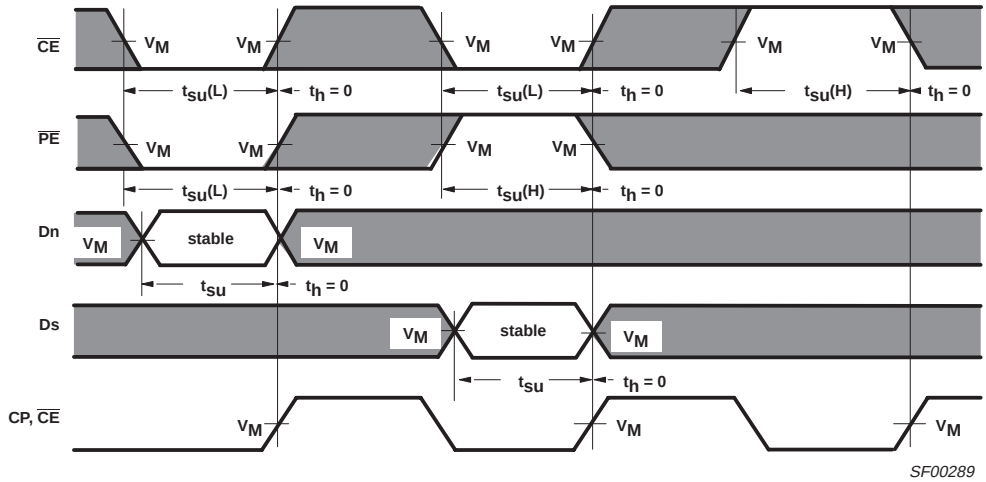

Waveform 3. Setup and hold times

Notes to AC waveforms

1. For all waveforms, V_M = 1.5V.
2. The shaded areas indicate when the input is permitted to change for predictable output performance.

TEST CIRCUIT AND WAVEFORMS

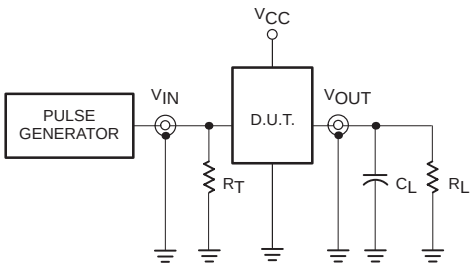

Test Circuit for Totem-Pole Outputs

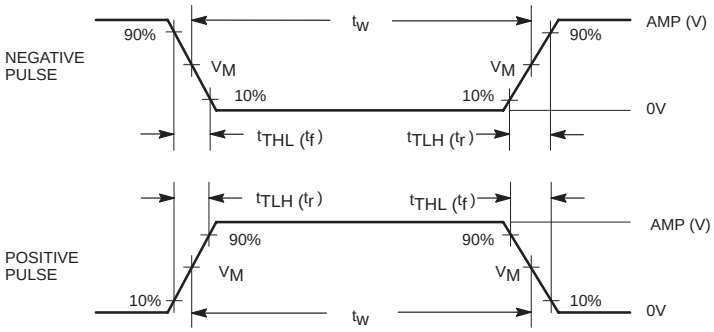

DEFINITIONS:

R_L = Load resistor; see AC ELECTRICAL CHARACTERISTICS for value.

C_L = Load capacitance includes jig and probe capacitance; see AC ELECTRICAL CHARACTERISTICS for value.

R_T = Termination resistance should be equal to Z_{OUT} of pulse generators.

Input Pulse Definition

family	INPUT PULSE REQUIREMENTS					
	amplitude	V_M	rep. rate	t_w	t_{TLH}	t_{THL}
74F	3.0V	1.5V	1MHz	500ns	2.5ns	2.5ns

SF00006

DIP16: plastic dual in-line package; 16 leads (300 mil) SOT38-4

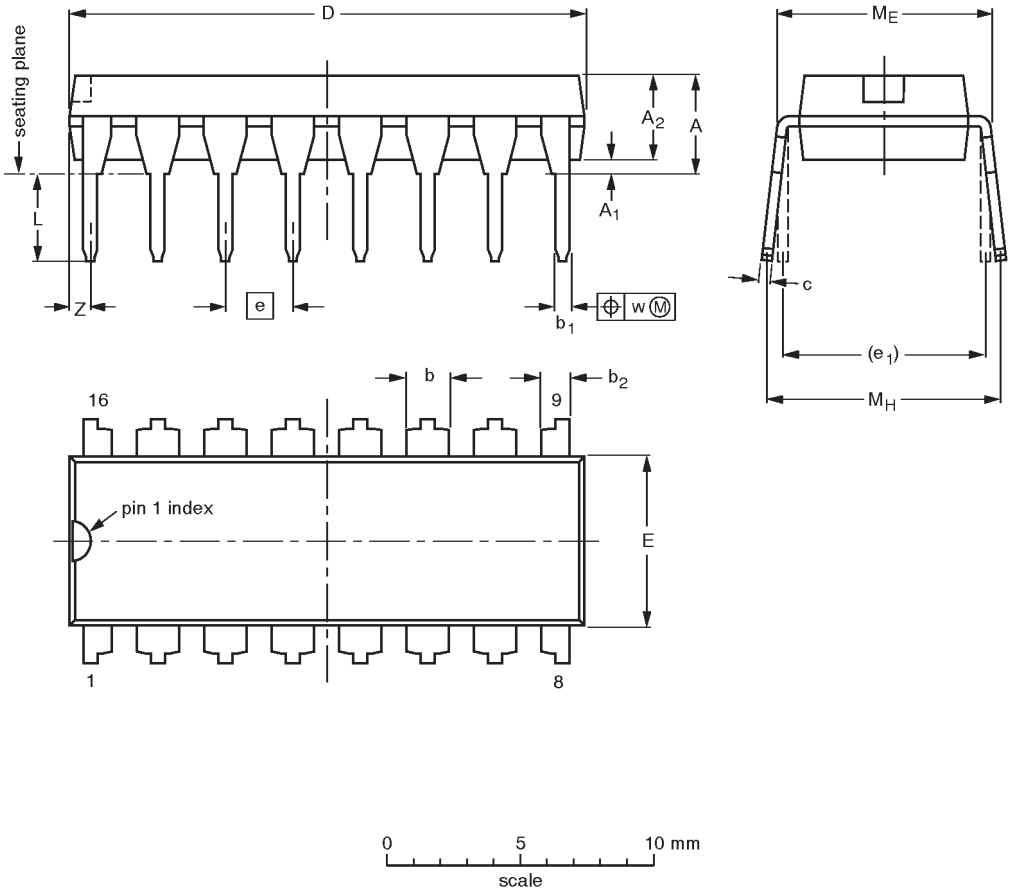

DIMENSIONS (inch dimensions are derived from the original mm dimensions)

UNIT	A max.	A_1 min.	A_2 max.	b	b_1	b_2	c	D (1)	E (1)	e	e_1	L	M_E	M_H	w	Z (1) max.
mm	4.2	0.51	3.2	1.73 1.30	0.53 0.38	1.25 0.85	0.36 0.23	19.50 18.55	6.48 6.20	2.54	7.62	3.60 3.05	8.25 7.80	10.0 8.3	0.254	0.76
inches	0.17	0.020	0.13	0.068 0.051	0.021 0.015	0.049 0.033	0.014 0.009	0.77 0.73	0.26 0.24	0.10	0.30	0.14 0.12	0.32 0.31	0.39 0.33	0.01	0.030

Note

1. Plastic or metal protrusions of 0.25 mm maximum per side are not included.

OUTLINE VERSION	REFERENCES				EUROPEAN PROJECTION	ISSUE DATE
	IEC	JEDEC	EIAJ			
SOT38-4						~~92-11-17~~ 95-01-14

SO16: plastic small outline package; 16 leads; body width 3.9 mm SOT109-1

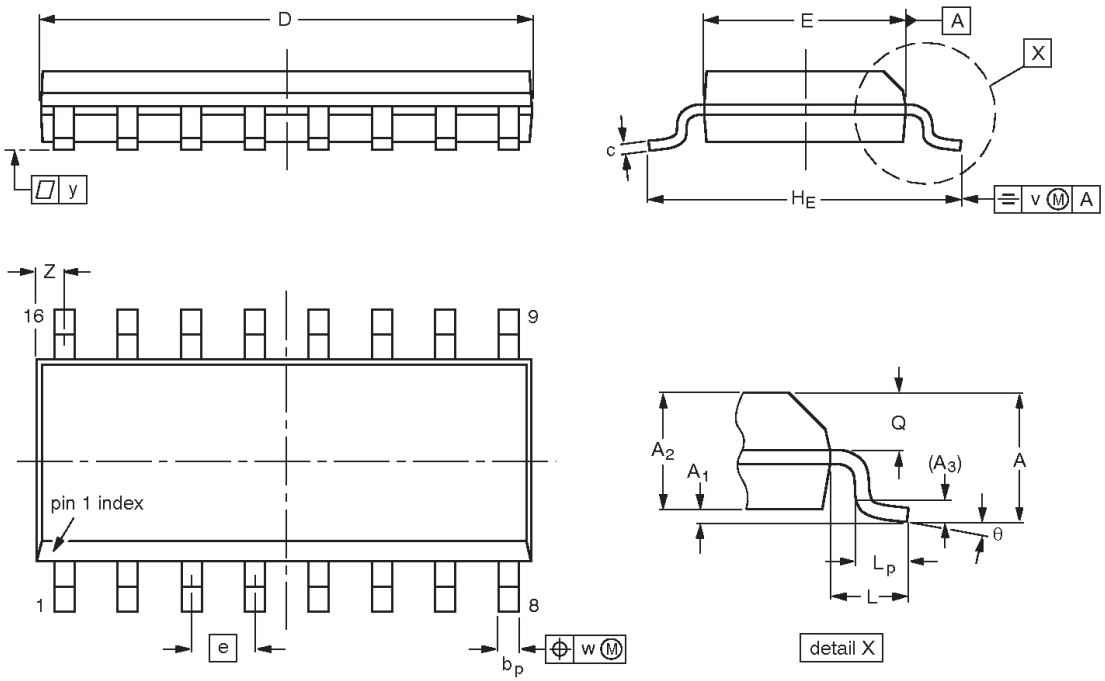

DIMENSIONS (inch dimensions are derived from the original mm dimensions)

UNIT	A max.	A_1	A_2	A_3	b_p	c	D(1)	E(1)	e	H_E	L	L_p	Q	v	w	y	Z(1)	θ
mm	1.75	0.25 0.10	1.45 1.25	0.25	0.49 0.36	0.25 0.19	10.0 9.8	4.0 3.8	1.27	6.2 5.8	1.05	1.0 0.4	0.7 0.6	0.25	0.25	0.1	0.7 0.3	8° 0°
inches	0.069	0.010 0.004	0.057 0.049	0.01	0.019 0.014	0.0100 0.0075	0.39 0.38	0.16 0.15	0.050	0.244 0.228	0.041	0.039 0.016	0.028 0.020	0.01	0.01	0.004	0.028 0.012	

Note

1. Plastic or metal protrusions of 0.15 mm maximum per side are not included.

OUTLINE VERSION	REFERENCES				EUROPEAN PROJECTION	ISSUE DATE
	IEC	JEDEC	EIAJ			
SOT109-1	076E07S	MS-012AC				~~95-01-23~~ 97-05-22

NOTES

Data sheet status

Data sheet status	Product status	Definition [1]
Objective specification	Development	This data sheet contains the design target or goal specifications for product development. Specification may change in any manner without notice.
Preliminary specification	Qualification	This data sheet contains preliminary data, and supplementary data will be published at a later date. Philips Semiconductors reserves the right to make chages at any time without notice in order to improve design and supply the best possible product.
Product specification	Production	This data sheet contains final specifications. Philips Semiconductors reserves the right to make changes at any time without notice in order to improve design and supply the best possible product.

[1] Please consult the most recently issued datasheet before initiating or completing a design.

Definitions

Short-form specification — The data in a short-form specification is extracted from a full data sheet with the same type number and title. For detailed information see the relevant data sheet or data handbook.

Limiting values definition — Limiting values given are in accordance with the Absolute Maximum Rating System (IEC 134). Stress above one or more of the limiting values may cause permanent damage to the device. These are stress ratings only and operation of the device at these or at any other conditions above those given in the Characteristics sections of the specification is not implied. Exposure to limiting values for extended periods may affect device reliability.

Application information — Applications that are described herein for any of these products are for illustrative purposes only. Philips Semiconductors make no representation or warranty that such applications will be suitable for the specified use without further testing or modification.

Disclaimers

Life support — These products are not designed for use in life support appliances, devices or systems where malfunction of these products can reasonably be expected to result in personal injury. Philips Semiconductors customers using or selling these products for use in such applications do so at their own risk and agree to fully indemnify Philips Semiconductors for any damages resulting from such application.

Right to make changes — Philips Semiconductors reserves the right to make changes, without notice, in the products, including circuits, standard cells, and/or software, described or contained herein in order to improve design and/or performance. Philips Semiconductors assumes no responsibility or liability for the use of any of these products, conveys no license or title under any patent, copyright, or mask work right to these products, and makes no representations or warranties that these products are free from patent, copyright, or mask work right infringement, unless otherwise specified.

Philips Semiconductors
811 East Arques Avenue
P.O. Box 3409
Sunnyvale, California 94088–3409
Telephone 800-234-7381

© Copyright Philips Electronics North America Corporation 1998
All rights reserved. Printed in U.S.A.

print code Date of release: 10-98

Document order number: 9397-750-05086

Let's make things better.

Philips Semiconductors

PHILIPS