PDTB113E series

PNP 500 mA, 50 V resistor-equipped transistors; R1 = 1 kΩ, R2 = 1 kΩ

Rev. 02 — 16 November 2009 Product data sheet

1. Product profile

1.1 General description

500 mA PNP Resistor-Equipped Transistors (RET) family.

Table 1. Product overview

Type number	Package			NPN complement
	NXP	JEITA	JEDEC	
PDTB113EK	SOT346	SC-59A	TO-236	PDTD113EK
PDTB113ES[1]	SOT54	SC-43A	TO-92	PDTD113ES
PDTB113ET	SOT23	-	TO-236AB	PDTD113ET

[1] Also available in SOT54A and SOT54 variant packages (see Section 2).

1.2 Features

- Built-in bias resistors
- Simplifies circuit design
- 500 mA output current capability
- Reduces component count
- Reduces pick and place costs
- ±10 % resistor ratio tolerance

1.3 Applications

- Digital application in automotive and industrial segments
- Controlling IC inputs
- Cost-saving alternative for BC807 series in digital applications
- Switching loads

1.4 Quick reference data

Table 2. Quick reference data

Symbol	Parameter	Conditions	Min	Typ	Max	Unit
V_{CEO}	collector-emitter voltage	open base	-	-	–50	V
I_O	output current (DC)		-	-	–500	mA
R1	bias resistor 1 (input)		0.7	1.0	1.3	kΩ
R2/R1	bias resistor ratio		0.9	1.0	1.1	

founded by Philips

2. Pinning information

Table 3. Pinning

Pin	Description	Simplified outline	Symbol
SOT54			
1	input (base)	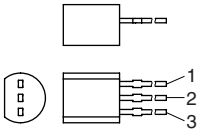 001aab347	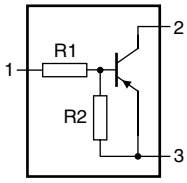 006aaa148
2	output (collector)		
3	GND (emitter)		
SOT54A			
1	input (base)	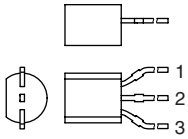 001aab348	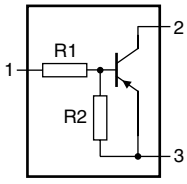 006aaa148
2	output (collector)		
3	GND (emitter)		
SOT54 variant			
1	input (base)	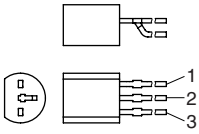 001aab447	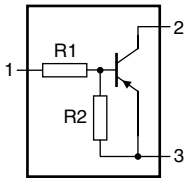 006aaa148
2	output (collector)		
3	GND (emitter)		
SOT23, SOT346			
1	input (base)	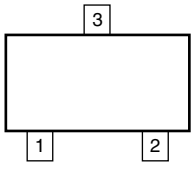 006aaa144	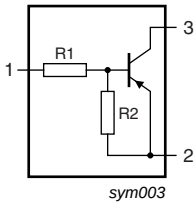 sym003
2	GND (emitter)		
3	output (collector)		

© NXP B.V. 2009. All rights reserved.

3. Ordering information

Table 4. Ordering information

Type number	Package		
	Name	Description	Version
PDTB113EK	SC-59A	plastic surface mounted package; 3 leads	SOT346
PDTB113ES[1]	SC-43A	plastic single-ended leaded (through hole) package; 3 leads	SOT54
PDTB113ET	-	plastic surface mounted package; 3 leads	SOT23

[1] Also available in SOT54A and SOT54 variant packages (see Section 2 and Section 9).

4. Marking

Table 5. Marking codes

Type number	Marking code[1]
PDTB113EK	E4
PDTB113ES	B113ES
PDTB113ET	*7U

[1] * = -: made in Hong Kong
* = p: made in Hong Kong
* = t: made in Malaysia
* = W: made in China

5. Limiting values

Table 6. Limiting values

In accordance with the Absolute Maximum Rating System (IEC 60134).

Symbol	Parameter	Conditions		Min	Max	Unit
V_{CBO}	collector-base voltage	open emitter		-	–50	V
V_{CEO}	collector-emitter voltage	open base		-	–50	V
V_{EBO}	emitter-base voltage	open collector		-	–10	V
V_I	input voltage					
	positive			-	+10	V
	negative			-	–10	V
I_O	output current (DC)			-	–500	mA
P_{tot}	total power dissipation	$T_{amb} \leq 25$ °C				
	SOT346		[1]	-	250	mW
	SOT54		[1]	-	500	mW
	SOT23		[1]	-	250	mW
T_{stg}	storage temperature			–65	+150	°C
T_j	junction temperature			-	150	°C
T_{amb}	ambient temperature			–65	+150	°C

[1] Device mounted on an FR4 Printed-Circuit Board (PCB), single-sided copper, tin-plated and standard footprint.

© NXP B.V. 2009. All rights reserved.

6. Thermal characteristics

Table 7. Thermal characteristics

Symbol	Parameter	Conditions		Min	Typ	Max	Unit
$R_{th(j-a)}$	thermal resistance from junction to ambient	in free air	[1]				
	SOT346			-	-	500	K/W
	SOT54			-	-	250	K/W
	SOT23			-	-	500	K/W

[1] Device mounted on an FR4 PCB, single-sided copper, tin-plated and standard footprint.

7. Characteristics

Table 8. Characteristics

T_{amb} = 25 °C unless otherwise specified.

Symbol	Parameter	Conditions	Min	Typ	Max	Unit
I_{CBO}	collector-base cut-off current	V_{CB} = –40 V; I_E = 0 A	-	-	–100	nA
		V_{CB} = –50 V; I_E = 0 A	-	-	–100	nA
I_{CEO}	collector-emitter cut-off current	V_{CE} = –50 V; I_B = 0 A	-	-	–0.5	μA
I_{EBO}	emitter-base cut-off current	V_{EB} = –5 V; I_C = 0 A	-	-	–4.0	mA
h_{FE}	DC current gain	V_{CE} = –5 V; I_C = –50 mA	33	-	-	
V_{CEsat}	collector-emitter saturation voltage	I_C = –50 mA; I_B = –2.5 mA	-	-	–0.3	mV
$V_{I(off)}$	off-state input voltage	V_{CE} = –5 V; I_C = –100 μA	–0.6	–1.1	–1.5	V
$V_{I(on)}$	on-state input voltage	V_{CE} = –0.3 V; I_C = –20 mA	–1.0	–1.4	–1.8	V
R1	bias resistor 1 (input)		0.7	1.0	1.3	kΩ
R2/R1	bias resistor ratio		0.9	1.0	1.1	
C_c	collector capacitance	V_{CB} = –10 V; I_E = i_e = 0 A; f = 100 MHz	-	11	-	pF

© NXP B.V. 2009. All rights reserved.

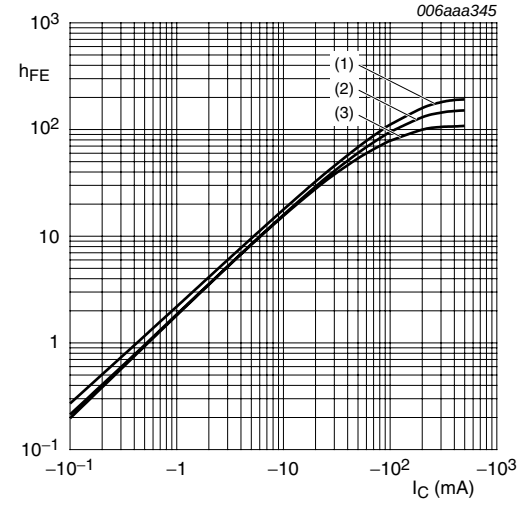

V_{CE} = −5 V

(1) T_{amb} = 100 °C

(2) T_{amb} = 25 °C

(3) T_{amb} = −40 °C

Fig 1. DC current gain as a function of collector current; typical values

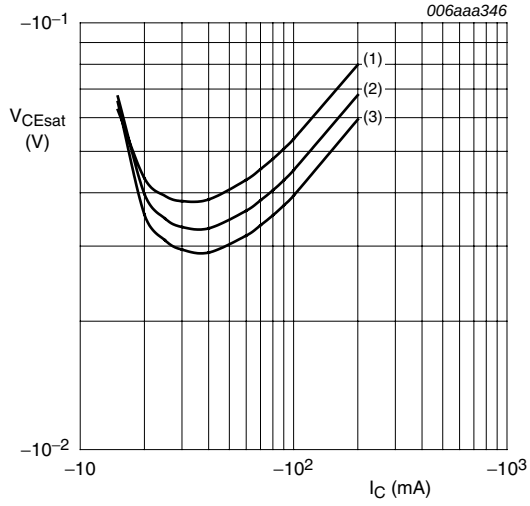

I_C/I_B = 20

(1) T_{amb} = 100 °C

(2) T_{amb} = 25 °C

(3) T_{amb} = −40 °C

Fig 2. Collector-emitter saturation voltage as a function of collector current; typical values

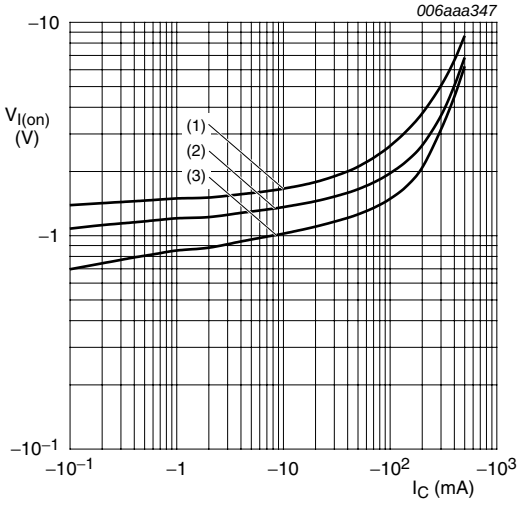

V_{CE} = −0.3 V

(1) T_{amb} = −40 °C

(2) T_{amb} = 25 °C

(3) T_{amb} = 100 °C

Fig 3. On-state input voltage as a function of collector current; typical values

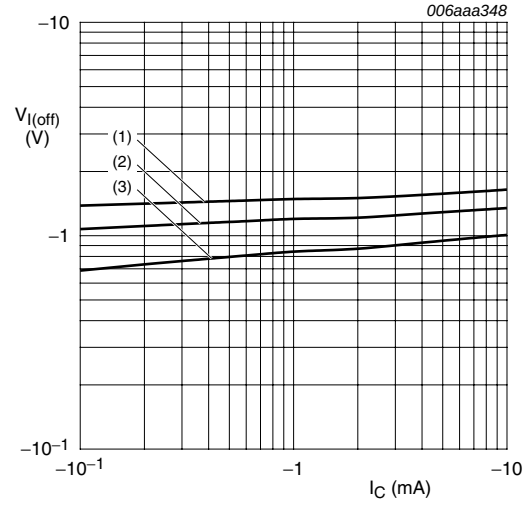

V_{CE} = −5 V

(1) T_{amb} = −40 °C

(2) T_{amb} = 25 °C

(3) T_{amb} = 100 °C

Fig 4. Off-state input voltage as a function of collector current; typical values

© NXP B.V. 2009. All rights reserved.

8. Package outline

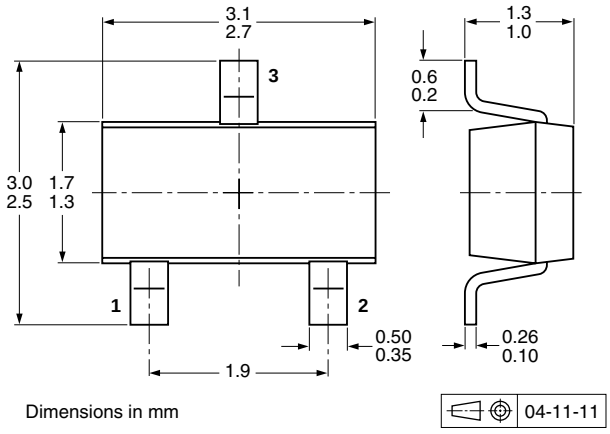

Fig 5. Package outline SOT346 (SC-59A/TO-236)

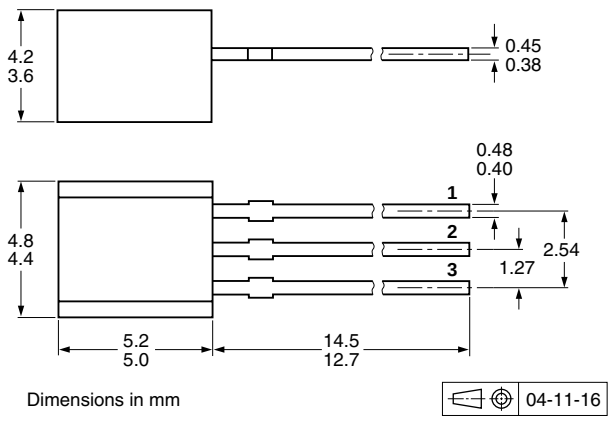

Fig 6. Package outline SOT54 (SC-43A/TO-92)

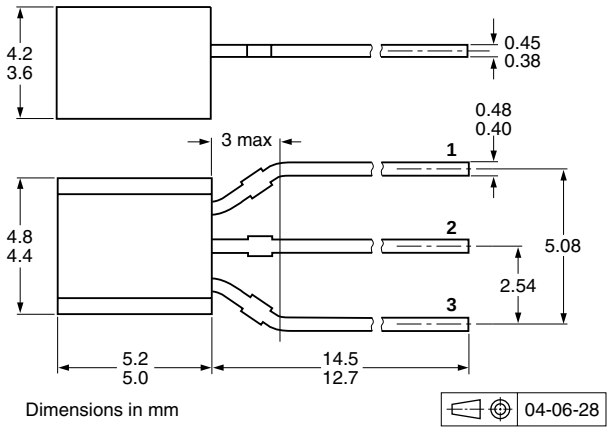

Fig 7. Package outline SOT54A

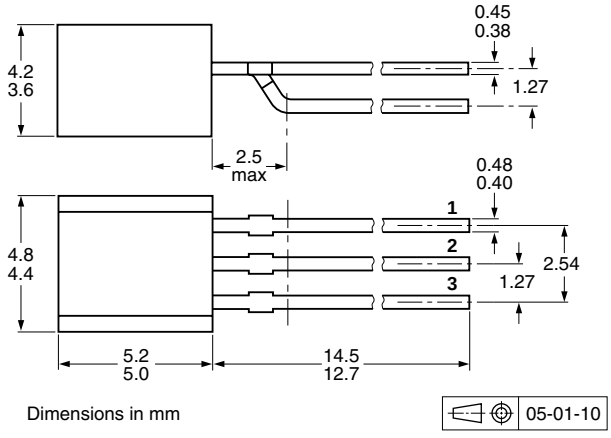

Fig 8. Package outline SOT54 variant

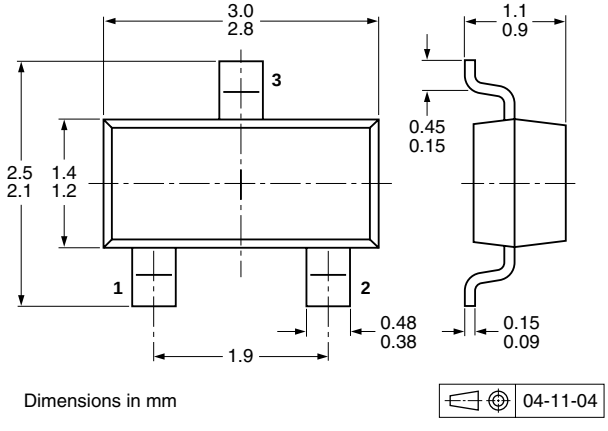

Fig 9. Package outline SOT23 (TO-236AB)

© NXP B.V. 2009. All rights reserved.

9. Packing information

Table 9. Packing methods

The indicated -xxx are the last three digits of the 12NC ordering code.[1]

Type number	Package	Description	Packing quantity		
			3000	5000	10000
PDTB113EK	SOT346	4 mm pitch, 8 mm tape and reel	-115	-	-135
PDTB113ES	SOT54	bulk, straight leads	-	-412	-
	SOT54A	tape and reel, wide pitch	-	-	-116
		tape ammopack, wide pitch	-	-	-126
	SOT54 variant	bulk, delta pinning	-	-112	-
PDTB113ET	SOT23	4 mm pitch, 8 mm tape and reel	-215	-	-235

[1] For further information and the availability of packing methods, see Section 12.

© NXP B.V. 2009. All rights reserved.

10. Revision history

Table 10. Revision history

Document ID	Release date	Data sheet status	Change notice	Supersedes
PDTB113E_SER_2	20091116	Product data sheet	-	PDTB113E_SER_1
Modifications:	• This data sheet was changed to reflect the new company name NXP Semiconductors, including new legal definitions and disclaimers. No changes were made to the technical content.			
PDTB113E_SER_1	20050427	Product data sheet	-	-

© NXP B.V. 2009. All rights reserved.

11. Legal information

11.1 Data sheet status

Document status[1][2]	Product status[3]	Definition
Objective [short] data sheet	Development	This document contains data from the objective specification for product development.
Preliminary [short] data sheet	Qualification	This document contains data from the preliminary specification.
Product [short] data sheet	Production	This document contains the product specification.

[1] Please consult the most recently issued document before initiating or completing a design.

[2] The term 'short data sheet' is explained in section "Definitions".

[3] The product status of device(s) described in this document may have changed since this document was published and may differ in case of multiple devices. The latest product status information is available on the Internet at URL http://www.nxp.com.

11.2 Definitions

Draft — The document is a draft version only. The content is still under internal review and subject to formal approval, which may result in modifications or additions. NXP Semiconductors does not give any representations or warranties as to the accuracy or completeness of information included herein and shall have no liability for the consequences of use of such information.

Short data sheet — A short data sheet is an extract from a full data sheet with the same product type number(s) and title. A short data sheet is intended for quick reference only and should not be relied upon to contain detailed and full information. For detailed and full information see the relevant full data sheet, which is available on request via the local NXP Semiconductors sales office. In case of any inconsistency or conflict with the short data sheet, the full data sheet shall prevail.

11.3 Disclaimers

General — Information in this document is believed to be accurate and reliable. However, NXP Semiconductors does not give any representations or warranties, expressed or implied, as to the accuracy or completeness of such information and shall have no liability for the consequences of use of such information.

Right to make changes — NXP Semiconductors reserves the right to make changes to information published in this document, including without limitation specifications and product descriptions, at any time and without notice. This document supersedes and replaces all information supplied prior to the publication hereof.

Suitability for use — NXP Semiconductors products are not designed, authorized or warranted to be suitable for use in medical, military, aircraft, space or life support equipment, nor in applications where failure or malfunction of an NXP Semiconductors product can reasonably be expected to result in personal injury, death or severe property or environmental damage. NXP Semiconductors accepts no liability for inclusion and/or use of NXP Semiconductors products in such equipment or applications and therefore such inclusion and/or use is at the customer's own risk.

Applications — Applications that are described herein for any of these products are for illustrative purposes only. NXP Semiconductors makes no representation or warranty that such applications will be suitable for the specified use without further testing or modification.

Limiting values — Stress above one or more limiting values (as defined in the Absolute Maximum Ratings System of IEC 60134) may cause permanent damage to the device. Limiting values are stress ratings only and operation of the device at these or any other conditions above those given in the Characteristics sections of this document is not implied. Exposure to limiting values for extended periods may affect device reliability.

Terms and conditions of sale — NXP Semiconductors products are sold subject to the general terms and conditions of commercial sale, as published at http://www.nxp.com/profile/terms, including those pertaining to warranty, intellectual property rights infringement and limitation of liability, unless explicitly otherwise agreed to in writing by NXP Semiconductors. In case of any inconsistency or conflict between information in this document and such terms and conditions, the latter will prevail.

No offer to sell or license — Nothing in this document may be interpreted or construed as an offer to sell products that is open for acceptance or the grant, conveyance or implication of any license under any copyrights, patents or other industrial or intellectual property rights.

Export control — This document as well as the item(s) described herein may be subject to export control regulations. Export might require a prior authorization from national authorities.

Quick reference data — The Quick reference data is an extract of the product data given in the Limiting values and Characteristics sections of this document, and as such is not complete, exhaustive or legally binding.

11.4 Trademarks

Notice: All referenced brands, product names, service names and trademarks are the property of their respective owners.

12. Contact information

For more information, please visit: **http://www.nxp.com**

For sales office addresses, please send an email to: **salesaddresses@nxp.com**

© NXP B.V. 2009. All rights reserved.

13. Contents

1 Product profile 1
1.1 General description 1
1.2 Features 1
1.3 Applications 1
1.4 Quick reference data 1
2 Pinning information 2
3 Ordering information 3
4 Marking 3
5 Limiting values 3
6 Thermal characteristics 4
7 Characteristics 4
8 Package outline 6
9 Packing information 7
10 Revision history 8
11 Legal information 9
11.1 Data sheet status 9
11.2 Definitions 9
11.3 Disclaimers 9
11.4 Trademarks 9
12 Contact information 9
13 Contents 10

Please be aware that important notices concerning this document and the product(s) described herein, have been included in section 'Legal information'.

founded by PHILIPS

© NXP B.V. 2009. All rights reserved.

For more information, please visit: http://www.nxp.com
For sales office addresses, please send an email to: salesaddresses@nxp.com

Date of release: 16 November 2009
Document identifier: PDTB113E_SER_2