STBV42D

High voltage fast-switching NPN power transistor

Preliminary data

Features

- High voltage capability
- Low spread of dynamic parameters
- Very high switching speed
- Integrated free-wheeling diode

Application

- Compact fluorescent lamps (CFLs)

Description

The device is manufactured using high voltage multi epitaxial planar technology for high switching speeds and high voltage capability. It uses a cellular emitter structure with planar edge termination to enhance switching speeds while maintaining the wide RBSOA.

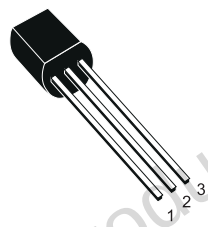

TO-92

Figure 1. Internal schematic diagram

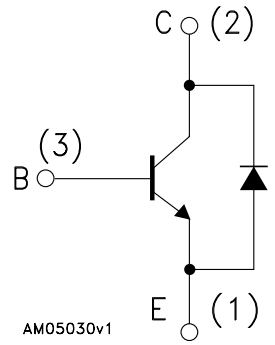

Table 1. Device summary

Order code	Marking	Package	Packaging
STBV42D	BV42D	TO-92	BAG

1 Electrical ratings

Table 2. Absolute maximum ratings

Symbol	Parameter	Value	Unit
V_{CES}	Collector-emitter voltage (V_{BE} = 0)	700	V
V_{CEO}	Collector-emitter voltage (I_B = 0)	400	V
V_{EBO}	Collector-base voltage (I_C = 0)	9	V
I_C	Collector current	1	A
I_{CM}	Collector peak current (t_P < 5 ms)	2	A
I_B	Base current	0.5	A
I_{BM}	Base peak current (t_P < 5 ms)	1	A
P_{TOT}	Total dissipation at T_c = 25 °C	1	W
T_{STG}	Storage temperature	- 65 to 150	°C
T_J	Max. operating junction temperature	150	

Table 3. Thermal data

Symbol	Parameter	Value	Unit
R_{thJC}	Thermal resistance junction-case	125	°C/W

2 Electrical characteristics

T_{case} = 25 °C; unless otherwise specified.

Table 4. Electrical characteristics

Symbol	Parameter	Test conditions	Min.	Typ.	Max.	Unit
I_{CES}	Collector cut-off current (V_{BE} = 0)	V_{CE} = 700 V V_{CE} = 700 V T_C = 125 °C			1 5	mA mA
I_{EBO}	Emitter cut-off current (I_C = 0)	V_{EB} = 9 V			1	mA
$V_{CEO(sus)}$ (1)	Collector-emitter sustaining voltage (I_B = 0)	I_C = 1 mA	400			V
$V_{CE(sat)}$ (1)	Collector-emitter saturation voltage	I_C = 0.25 A I_B = 50 mA I_C = 0.5 A I_B = 125 mA I_C = 0.75 A I_B = 250 mA		0.2 0.3 0.4	0.5 1 1.5	V V V
$V_{BE(sat)}$ (1)	Base-emitter saturation voltage	I_C = 0.25 A I_B = 50 mA I_C = 0.5 A I_B = 125 mA			1 1.2	V V
h_{FE} (1)	DC current gain	I_C = 5 mA, V_{CE} = 2 V I_C = 0.4 A, V_{CE} = 5 V I_C = 0.8 A V_{CE} = 5 V	12 10 5		 30 20	
t_f	Inductive Load Fall time	I_C = 0.25 A V_{clamp} = 300 V $I_{B(on)}$ = -$I_{B(off)}$ = 50 mA L = 3 mH *Figure 2*		0.3		µs
V_F	Diode forward voltage	I_F = 350 mA			1.7	V

1. Pulse test: pulse duration ≤ 300 µs, duty cycle ≤ 2 %

2.1 Test circuit

Figure 2. Inductive load switching test circuit

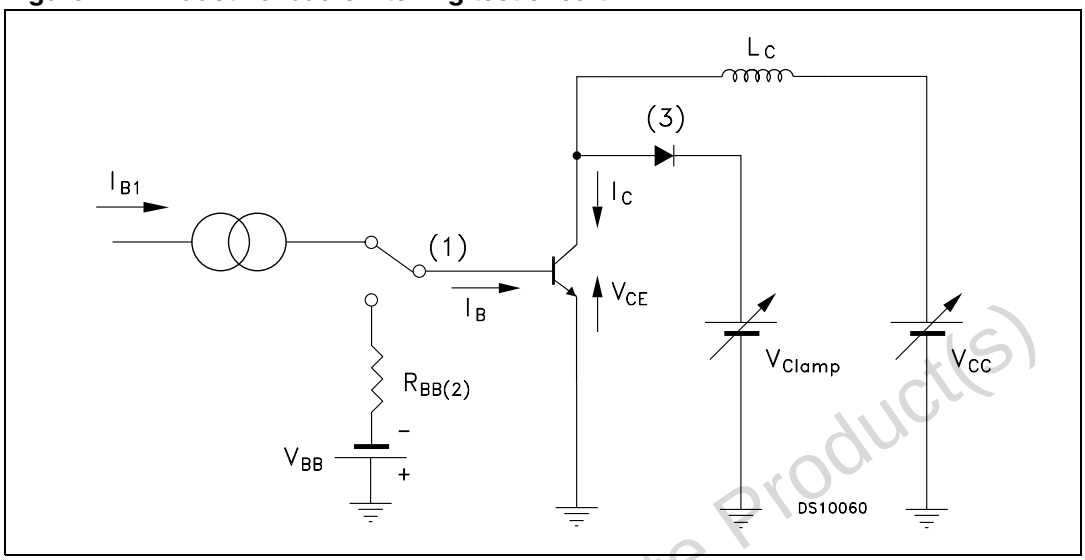

1. Fast electronic switch
2. Non-inductive resistor
3. Fast recovery rectifier

3 Package mechanical data

In order to meet environmental requirements, ST offers these devices in different grades of ECOPACK® packages, depending on their level of environmental compliance. ECOPACK® specifications, grade definitions and product status are available at: *www.st.com*. ECOPACK® is an ST trademark.

TO-92 bulk shipment mechanical data

DIM.	mm.		
	MIN.	TYP	MAX.
A	4.32		4.95
b	0.36		0.51
D	4.45		4.95
E	3.30		3.94
e	2.41		2.67
e1	1.14		1.40
L	12.70		15.49
R	2.16		2.41
S1	0.92		1.52
W	0.41		0.56
V		5°	

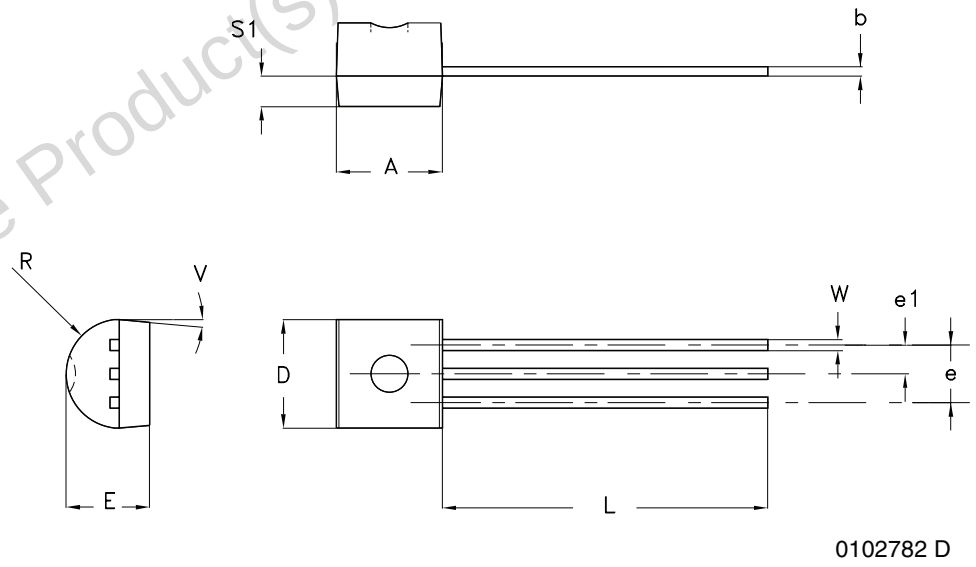

4 Revision history

Table 5. Document revision history

Date	Revision	Changes
08-Mar-2010	1	First release.
28-Apr-2010	2	Inserted V_F maximum value *Table 4 on page 3*.