STEVAL-CBL003V1

LNB power supply demonstration board based on the LNBH23

Data Brief

Features

- Integrated DC-DC converter
- Single input supply voltage: from 8 V to 15 V
- I^2C bus interface for the IC control and diagnostics
- Integrated 22 kHz tone generator, factory trimmed in accordance with the standards that can be controlled by the DSQIN pin or I^2C bus
- User-friendly graphical interface ("LNBxxx control suite" software included in the kit)

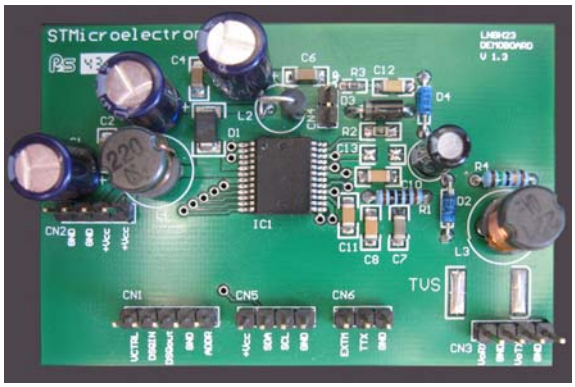

STEVAL-CBL003V1

Description

This demonstration board implements a DC-DC converter based on the LNBH23 device. It is used to power LNBs inside dish antennas to receive satellite TV signals.

The LNBH23 is an integrated solution for supplying/interfacing satellite LNB modules in accordance with international standards

This simple solution provides good performance at low cost using a low external component count.

The LNBH23 demonstration board includes an I^2C™ bus interface and the internal 22 kHz tone generator which is factory trimmed and can be controlled by the DSQIN pin (TTL compatible. This allows immediate DiSEqC™ data encoding.

Thanks to a fully integrated step-up DC-DC converter, it functions with a single input voltage supply source ranging from 8 V to 15 V.

1 Block diagram

Figure 1. LNBH23 demonstration board schematic

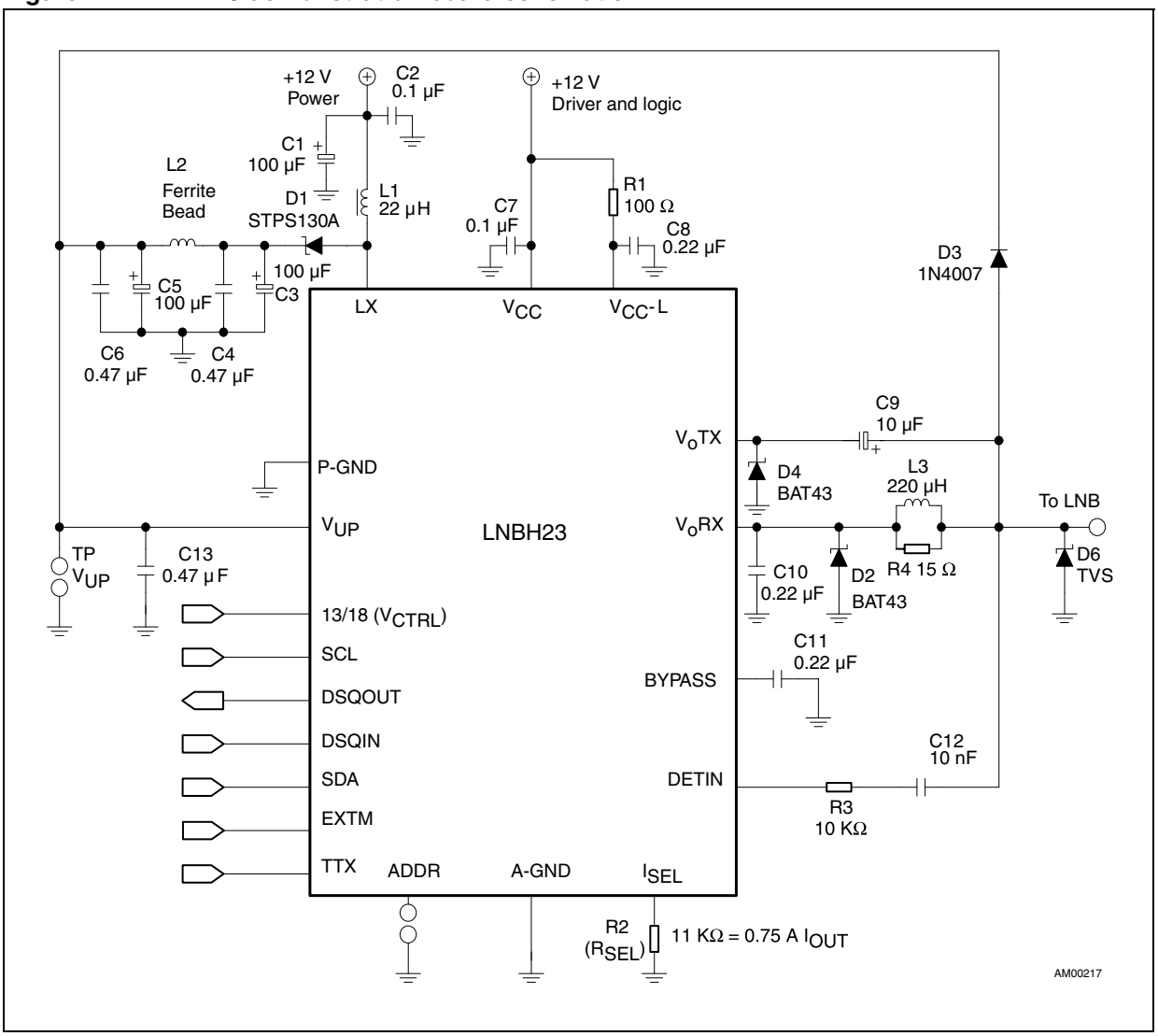

2 Revision history

Table 1. Document revision history

Date	Revision	Changes
17-Sep-2008	1	Initial release.