STEVAL-IHM023V1

1 kW 3-phase motor control demonstration board based on the L6390 drivers and STGP10NC60KD IGBT

Data brief

Features

- Complete solution of 1 kW power inverter
- Single phase connecting - supply AC voltage from 90 VAC to 285 VAC
- Direct DC line input up to 400 VDC
- Possibility to use wide range of HV motors or LV motors with BEMF sensing
- Input inrush limiter with bypassing relay
- Brake feature with overvoltage comparator
- Tacho input, hall sensor or encoder input feature
- Overtemperature and overcurrent hardware protection
- Compact, safety and fully evaluated design
- RoHS Compliant

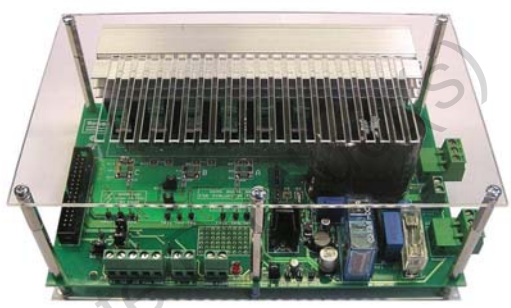

STEVAL-IHM023V1

AM05056v1

Description

The STEVAL-IHM023V1 is a demonstration board designed to implement general purpose low power 3-phase inverter for 3-phase asynchronous motors, bi-phase AC motors or PMAC motors up to 1000 W.
It is fully equipped and convenient for evaluating customers solution in applications like: drum motor control for washing machine, power white goods application, medical beds, water pump for home appliance white goods, transfer pumps for waste sludge – sewerage plants and high efficiency transfer pumps for outlet condensation water in gas furnace application.

Obsolete Product(s) - Obsolete Product(s)

For further information contact your local STMicroelectronics sales office. www.st.com

1 Schematic circuits

Figure 1. Power supply & control circuits

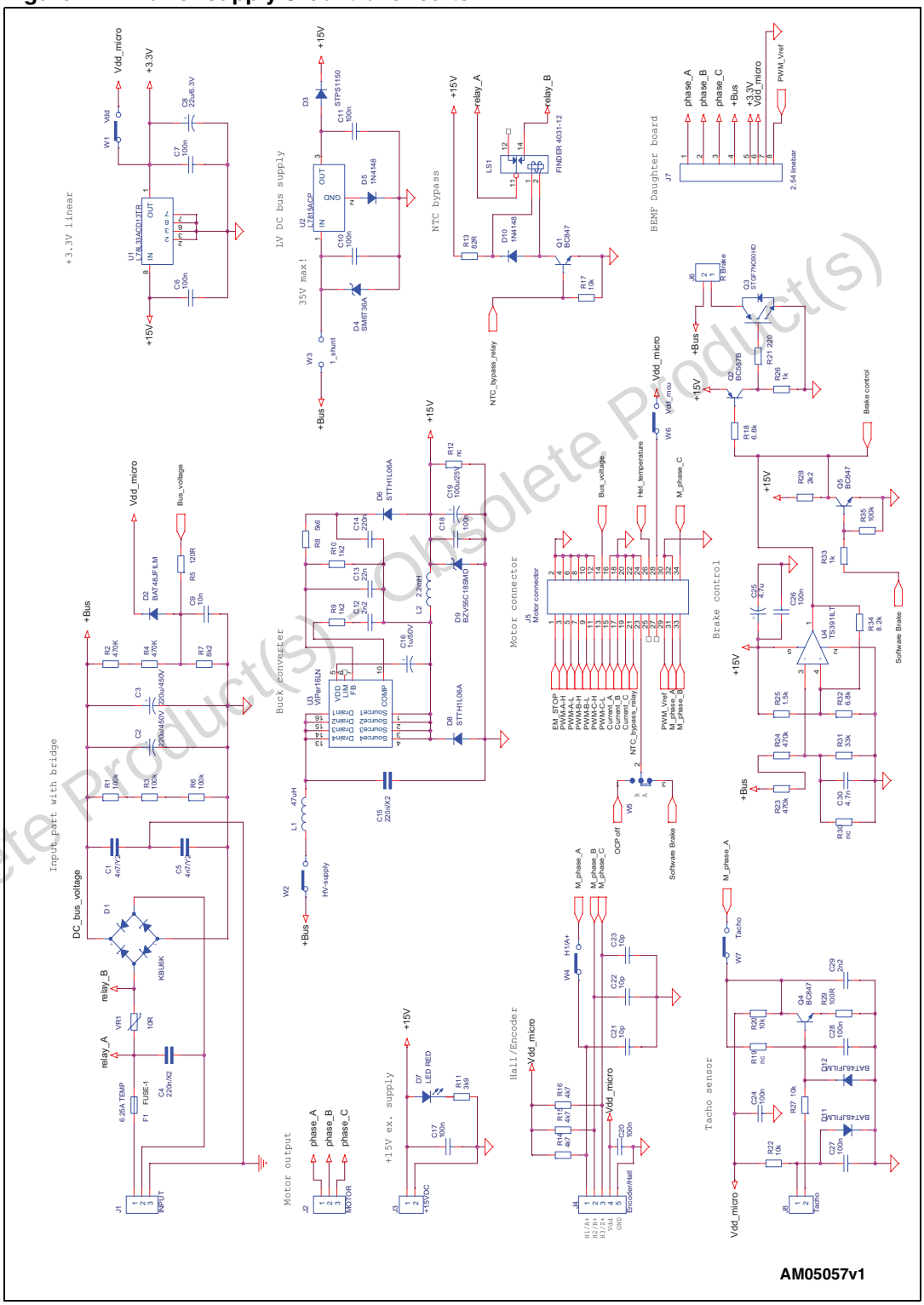

Obsolete Product(s) - Obsolete Product(s)

Figure 2. HV driver channels

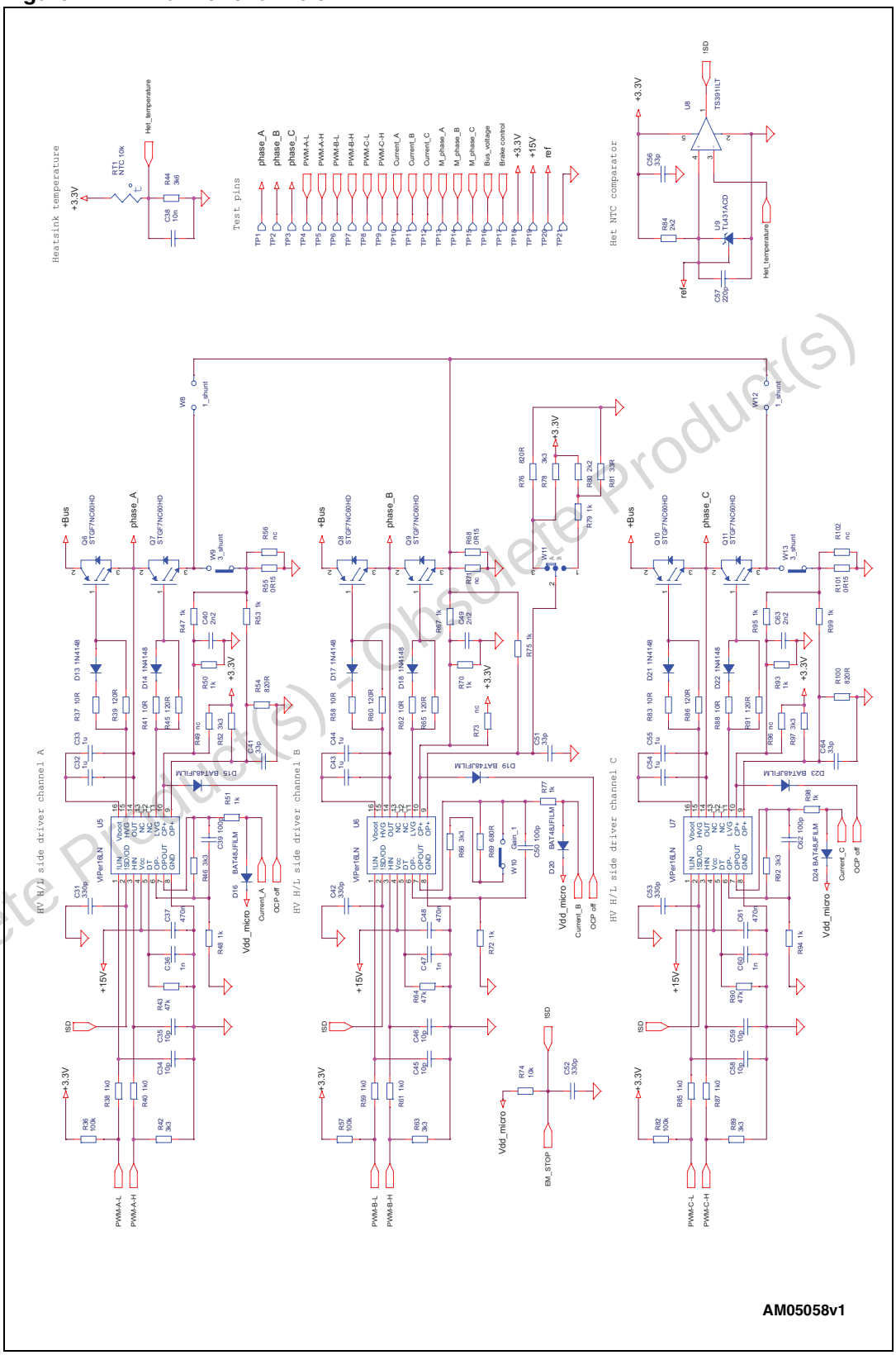

Obsolete Product(s) - Obsolete Product(s)

2 Revision history

Table 1. Document revision history

Date	Revision	Changes
16-Jul-2009	1	Initial release.

Obsolete Product(s) - Obsolete Product(s)

Please Read Carefully:

Information in this document is provided solely in connection with ST products. STMicroelectronics NV and its subsidiaries (“ST”) reserve the right to make changes, corrections, modifications or improvements, to this document, and the products and services described herein at any time, without notice.

All ST products are sold pursuant to ST’s terms and conditions of sale.

Purchasers are solely responsible for the choice, selection and use of the ST products and services described herein, and ST assumes no liability whatsoever relating to the choice, selection or use of the ST products and services described herein.

No license, express or implied, by estoppel or otherwise, to any intellectual property rights is granted under this document. If any part of this document refers to any third party products or services it shall not be deemed a license grant by ST for the use of such third party products or services, or any intellectual property contained therein or considered as a warranty covering the use in any manner whatsoever of such third party products or services or any intellectual property contained therein.

UNLESS OTHERWISE SET FORTH IN ST’S TERMS AND CONDITIONS OF SALE ST DISCLAIMS ANY EXPRESS OR IMPLIED WARRANTY WITH RESPECT TO THE USE AND/OR SALE OF ST PRODUCTS INCLUDING WITHOUT LIMITATION IMPLIED WARRANTIES OF MERCHANTABILITY, FITNESS FOR A PARTICULAR PURPOSE (AND THEIR EQUIVALENTS UNDER THE LAWS OF ANY JURISDICTION), OR INFRINGEMENT OF ANY PATENT, COPYRIGHT OR OTHER INTELLECTUAL PROPERTY RIGHT.

UNLESS EXPRESSLY APPROVED IN WRITING BY AN AUTHORIZED ST REPRESENTATIVE, ST PRODUCTS ARE NOT RECOMMENDED, AUTHORIZED OR WARRANTED FOR USE IN MILITARY, AIR CRAFT, SPACE, LIFE SAVING, OR LIFE SUSTAINING APPLICATIONS, NOR IN PRODUCTS OR SYSTEMS WHERE FAILURE OR MALFUNCTION MAY RESULT IN PERSONAL INJURY, DEATH, OR SEVERE PROPERTY OR ENVIRONMENTAL DAMAGE. ST PRODUCTS WHICH ARE NOT SPECIFIED AS "AUTOMOTIVE GRADE" MAY ONLY BE USED IN AUTOMOTIVE APPLICATIONS AT USER’S OWN RISK.

Resale of ST products with provisions different from the statements and/or technical features set forth in this document shall immediately void any warranty granted by ST for the ST product or service described herein and shall not create or extend in any manner whatsoever, any liability of ST.

ST and the ST logo are trademarks or registered trademarks of ST in various countries.

Information in this document supersedes and replaces all information previously supplied.

The ST logo is a registered trademark of STMicroelectronics. All other names are the property of their respective owners.

© 2009 STMicroelectronics - All rights reserved

STMicroelectronics group of companies

Australia - Belgium - Brazil - Canada - China - Czech Republic - Finland - France - Germany - Hong Kong - India - Israel - Italy - Japan - Malaysia - Malta - Morocco - Philippines - Singapore - Spain - Sweden - Switzerland - United Kingdom - United States of America

www.st.com

Obsolete Product(s) - Obsolete Product(s)