STEVAL-IHP001V2

SmartPlug demonstration board based on the STM32, SN260 (ZigBee® transceiver) and STPM01

Data brief

Features

- Energy consumption monitoring
- Time-band configuration
- Network/standalone modes
- ZigBee® well suited for home automation application
- Ground fault detection (in the "safety" version)
- Dimming (in the "dimming" version)
- RoHS compliant

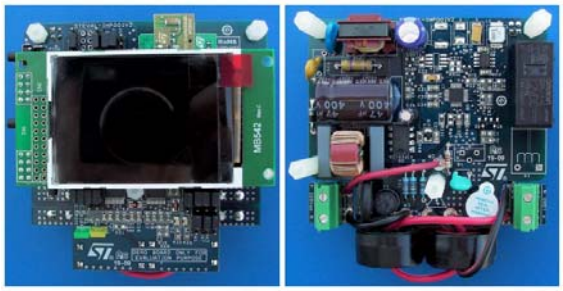

STEVAL-IHP001V2

Description

The STEVAL-IHP001V2 is a SmartPlug board based on an STM32F10x microcontroller, an SPZB260 ZigBee® module, and an STPM01 energy metering IC.

It implements a ZigBee® metering node which allows the final user to monitor and manage energy consumption.

The board has been developed to provide a guideline to build a home/building automation subsystem for energy management. In a typical home system implementation, the board is plugged into an electrical wall socket and supplies a home appliance or other generic electrical load.

The current, power, energy and other information related to the electrical load connected to the SmartPlug board can be displayed locally on an LCD screen, or send to a ZigBee® data concentrator through the home/building ZigBee® network.

1 Schematics diagram

Figure 1. AC load driver page

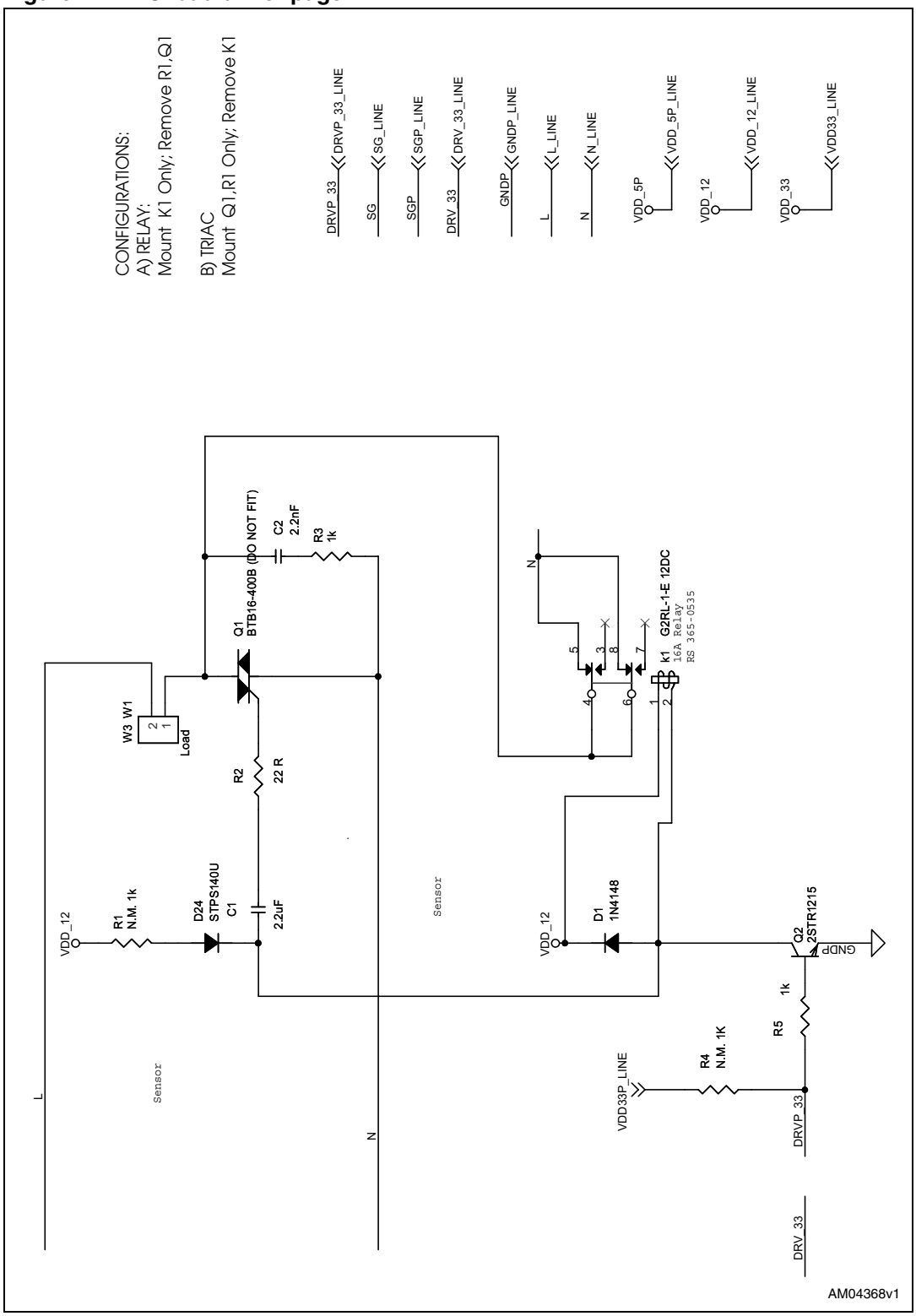

Figure 2. Jumpers configuration

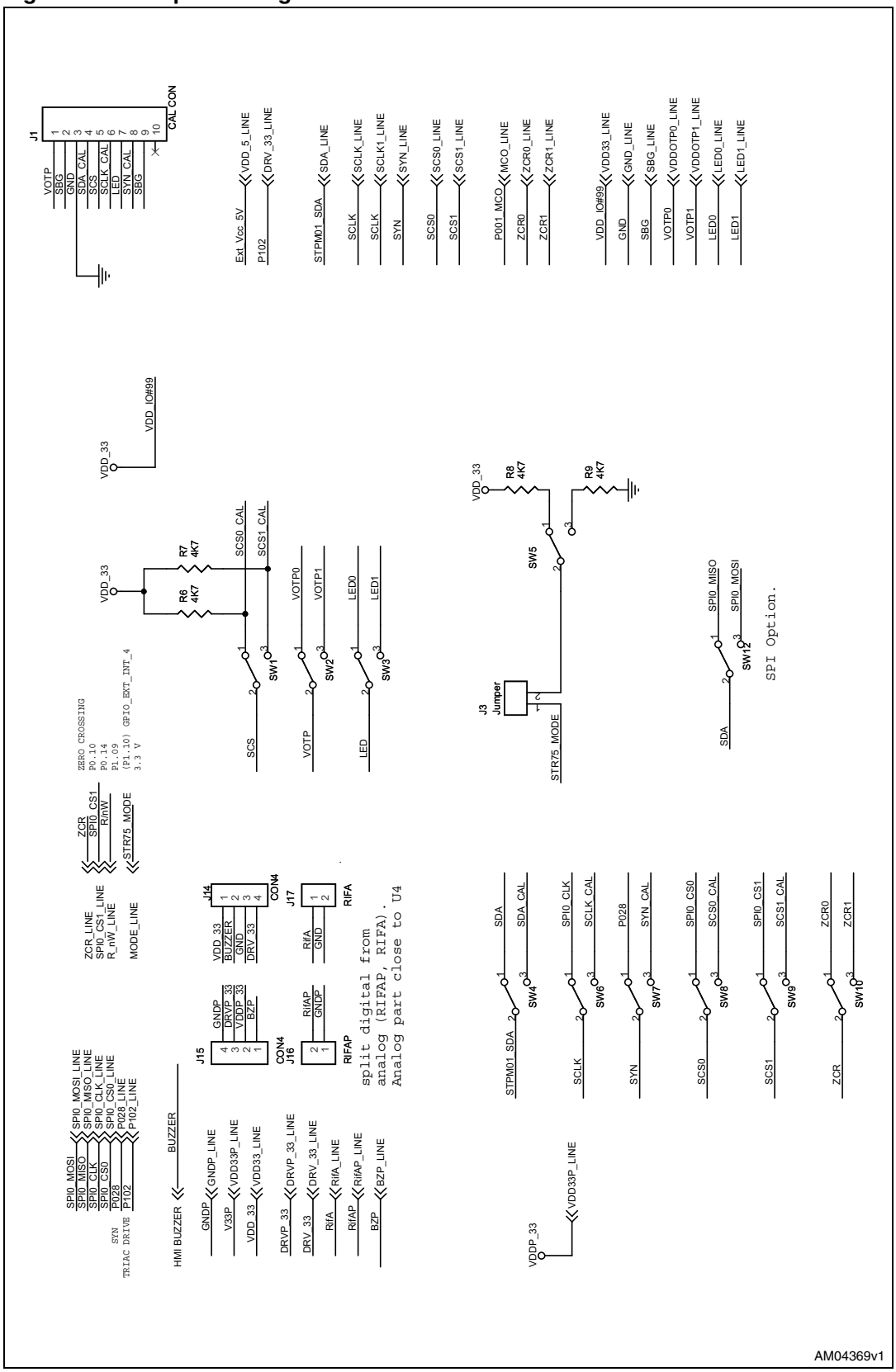

Figure 3. Temperature sensor and connectors

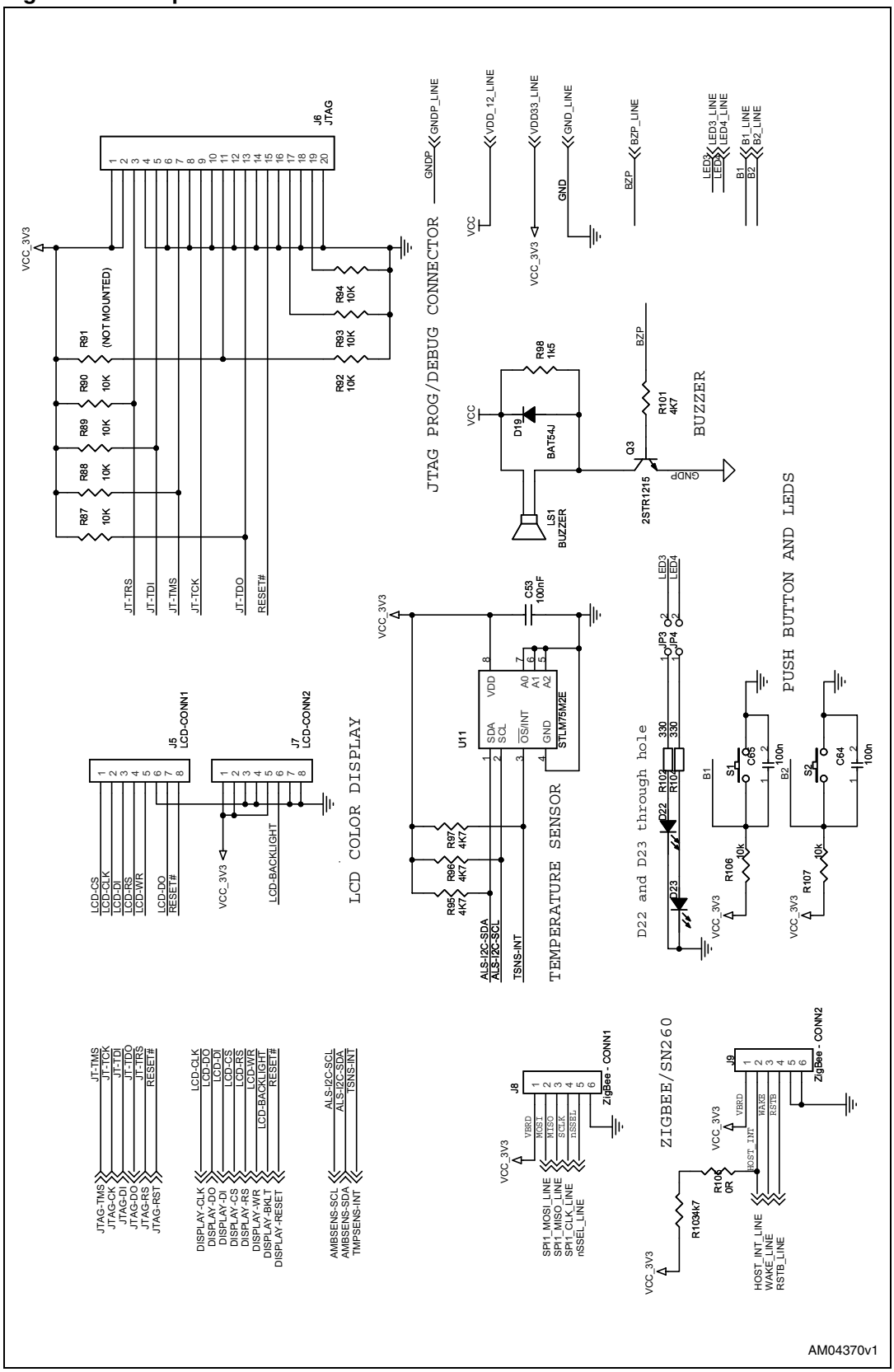

Figure 4. Microcontroller

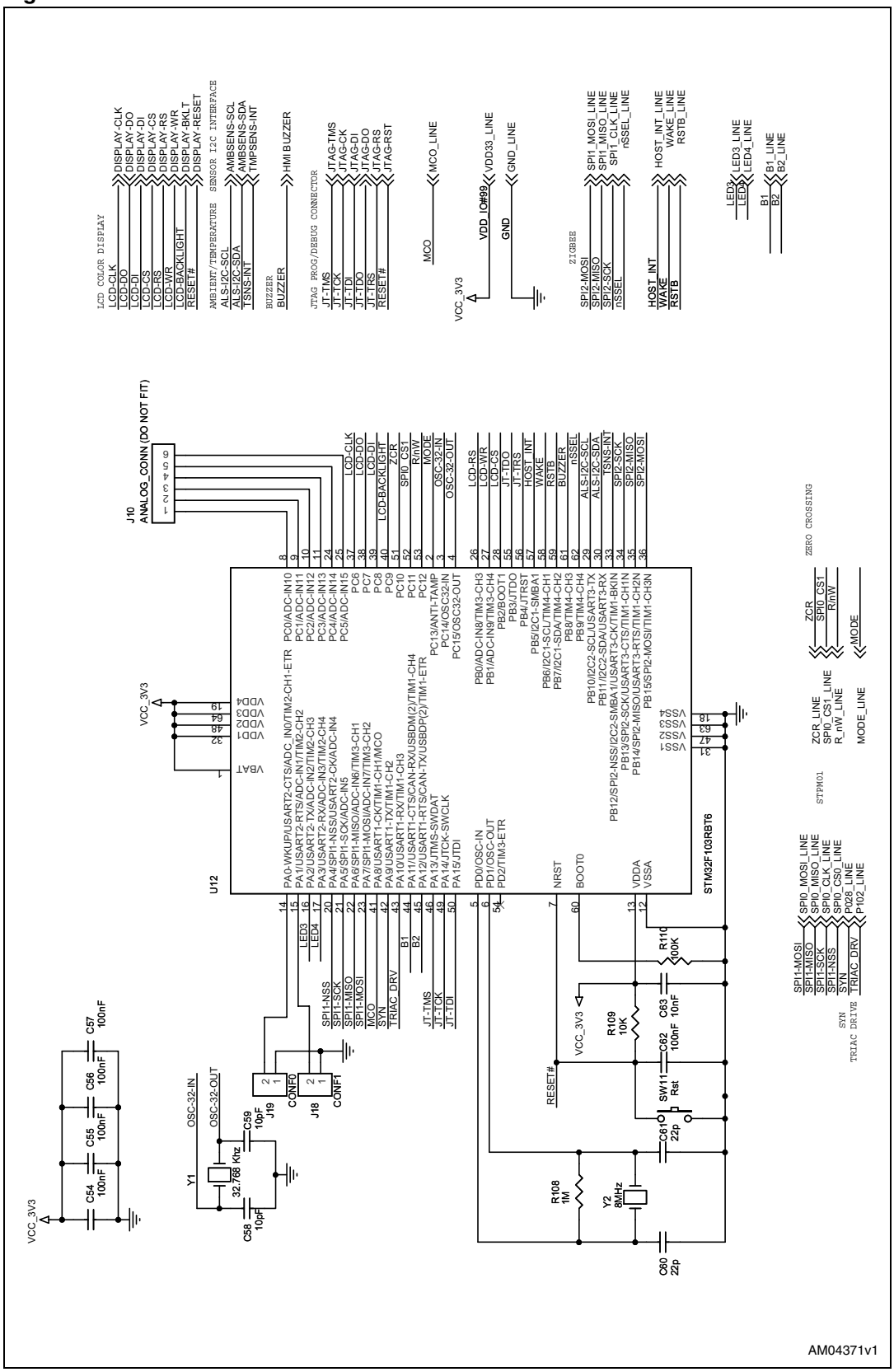

Figure 5. Energy meter IC

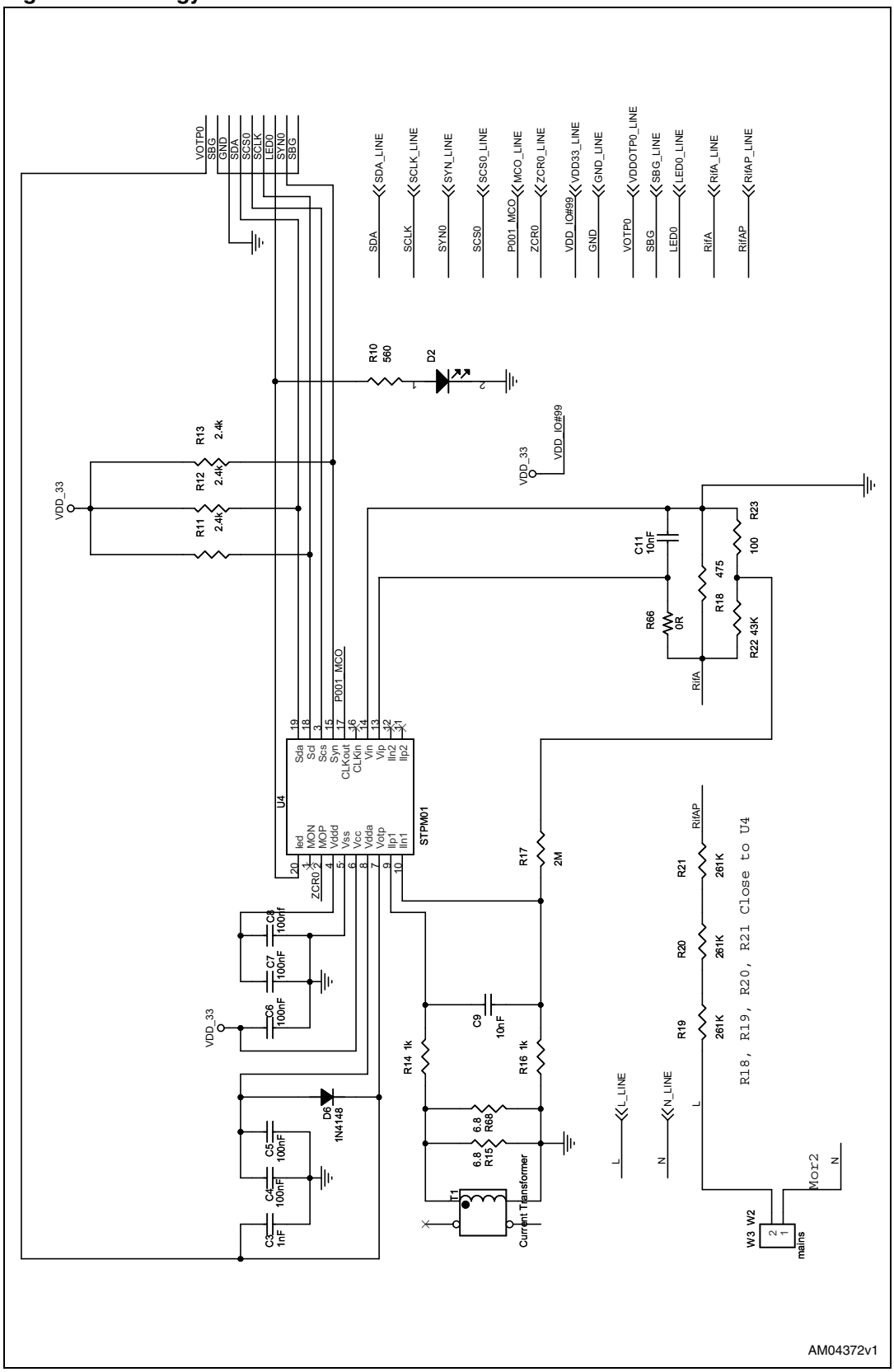

Figure 6. Differential current meter

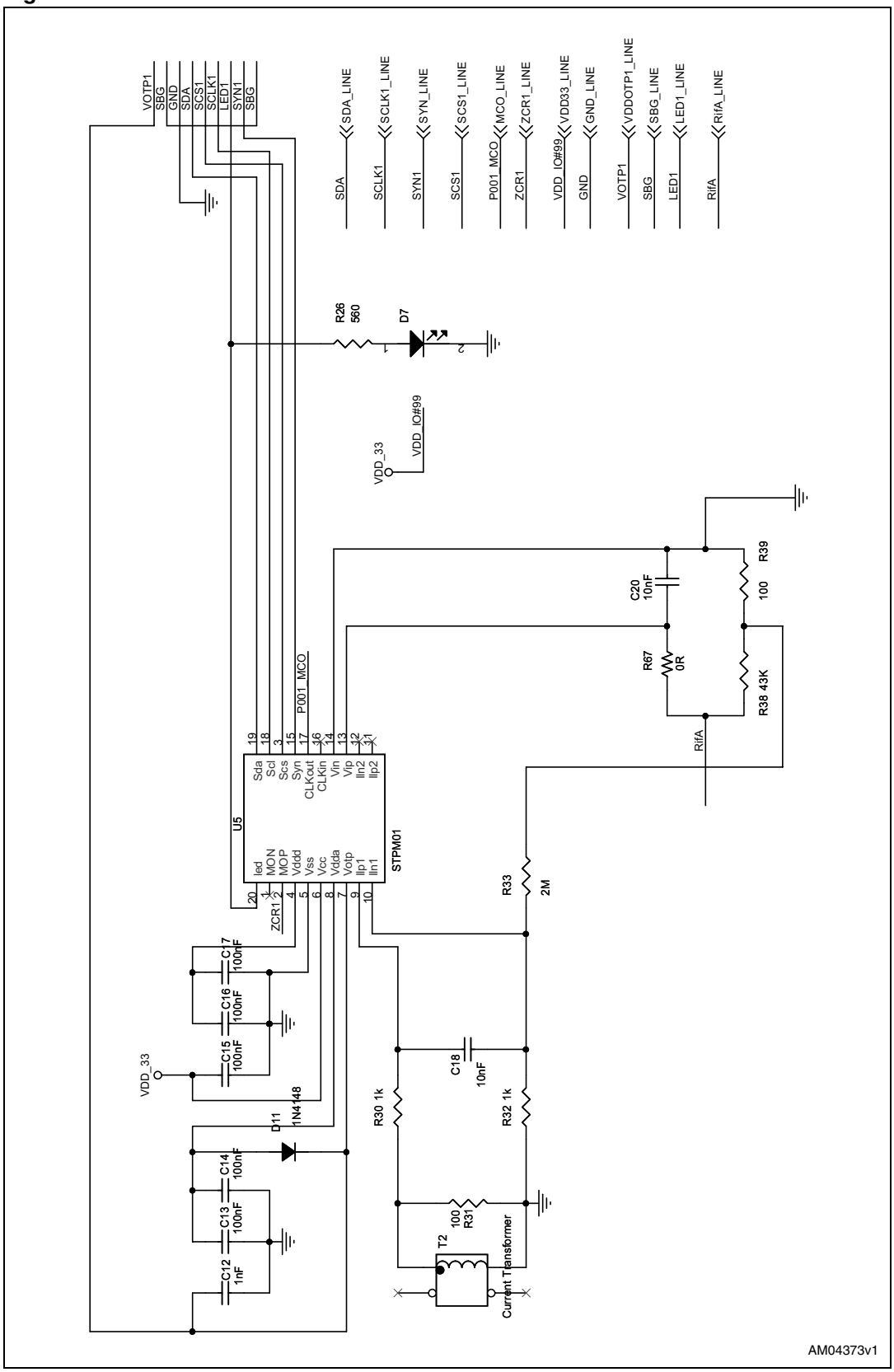

Figure 7. AC/DC converter

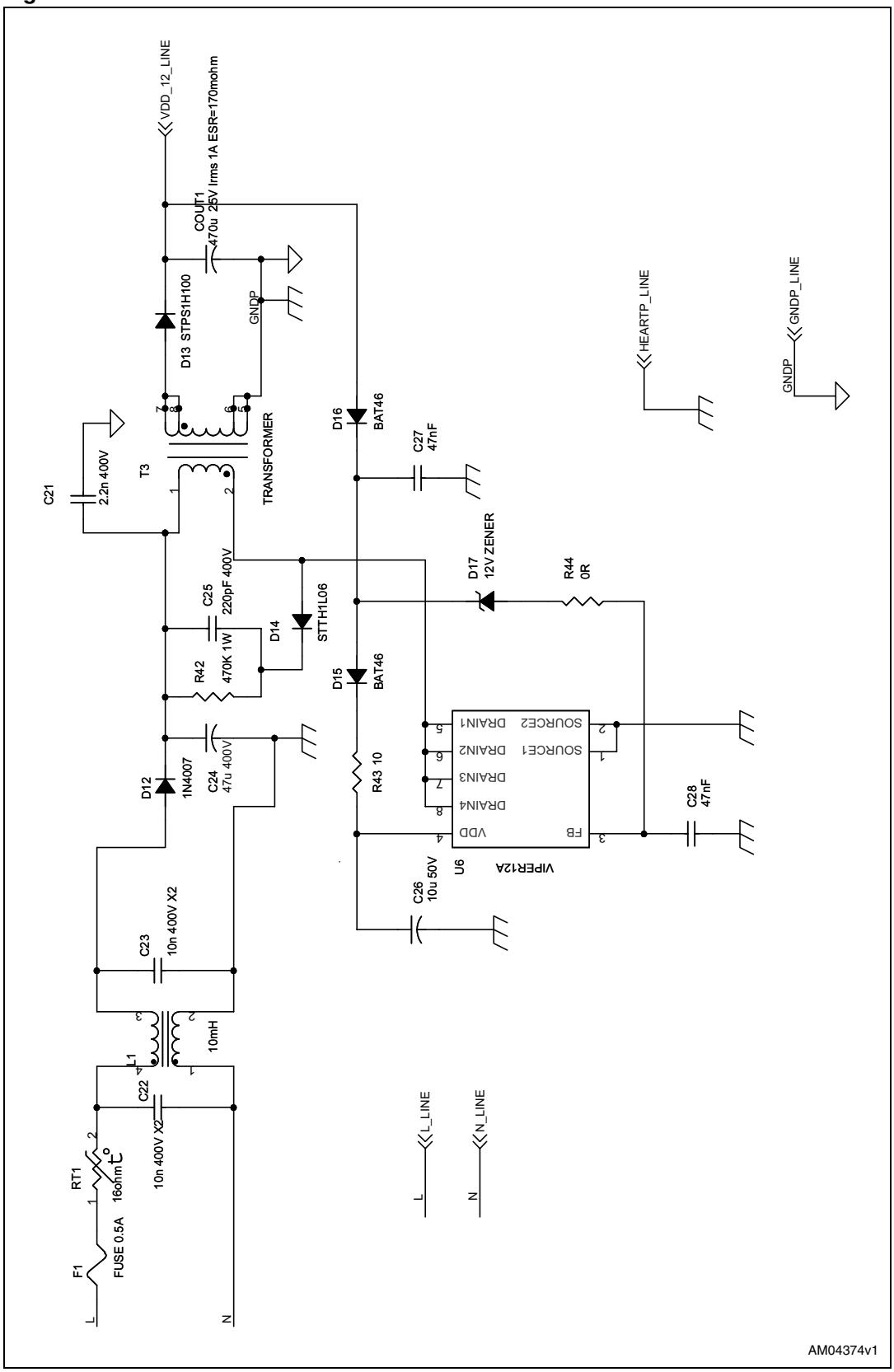

Figure 8. DC/DC converter

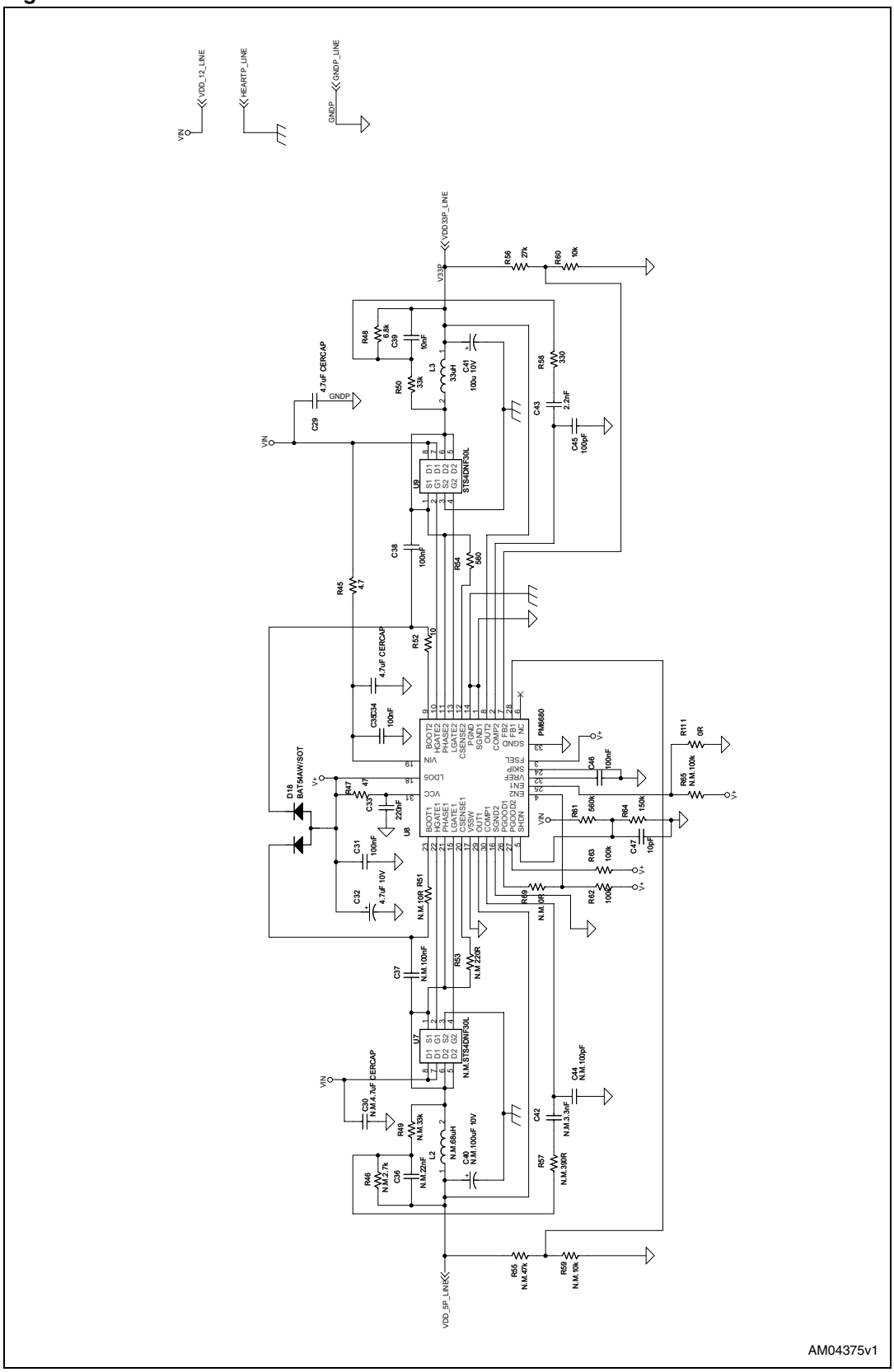

2 Revision history

Table 1. Document revision history

Date	Revision	Changes
01-Jul-2009	1	Initial release.