STEVAL-IHP002V1

SmartPlug systems to measure and control AC loads, based on the STM32, ST7540 PLM, and STPM01

Data brief

Features

- Energy consumption monitoring
- PLM communication
- On/Off or dimming configuration
- CENELEC band C compliant
- System setting by RS232
- RoHS compliant

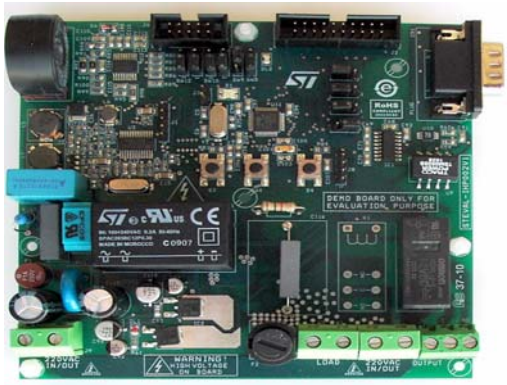

STEVAL-IHP002V1

Description

The STEVAL-IHP002V1 demonstration board is a SmartPlug based on the STM32F10x microcontroller, ST7540 PLM, and STPM01 energy metering ICs. The board is a node of a PLM network which allows the final user to monitor and manage the plugged load energy consumption, and can work in conjunction with the STEVAL-IHP003V1 used as a data concentrator for connection to a PC.

The board has been developed as a guideline to build a home/building automation subsystem for energy management. It is designed to fit the dimensions of a standard box for wall installation and easy integration into home/building electrical plants. The current, power, energy and other information related to the electrical load connected to the SmartPlug board are sent to a PLM data concentrator (such as the STEVAL-IHP003V1) through the home/building PLM network. A protocol stack has been implemented to allow node communication; it includes a PHY layer with FEC, a MAC layer with CSMA/CA and ACK, and a network layer with static addressing and routing topology.

For further information contact your local STMicroelectronics sales office. www.st.com

1 Circuit schematics

Figure 1. PLM SmartPlug - top view

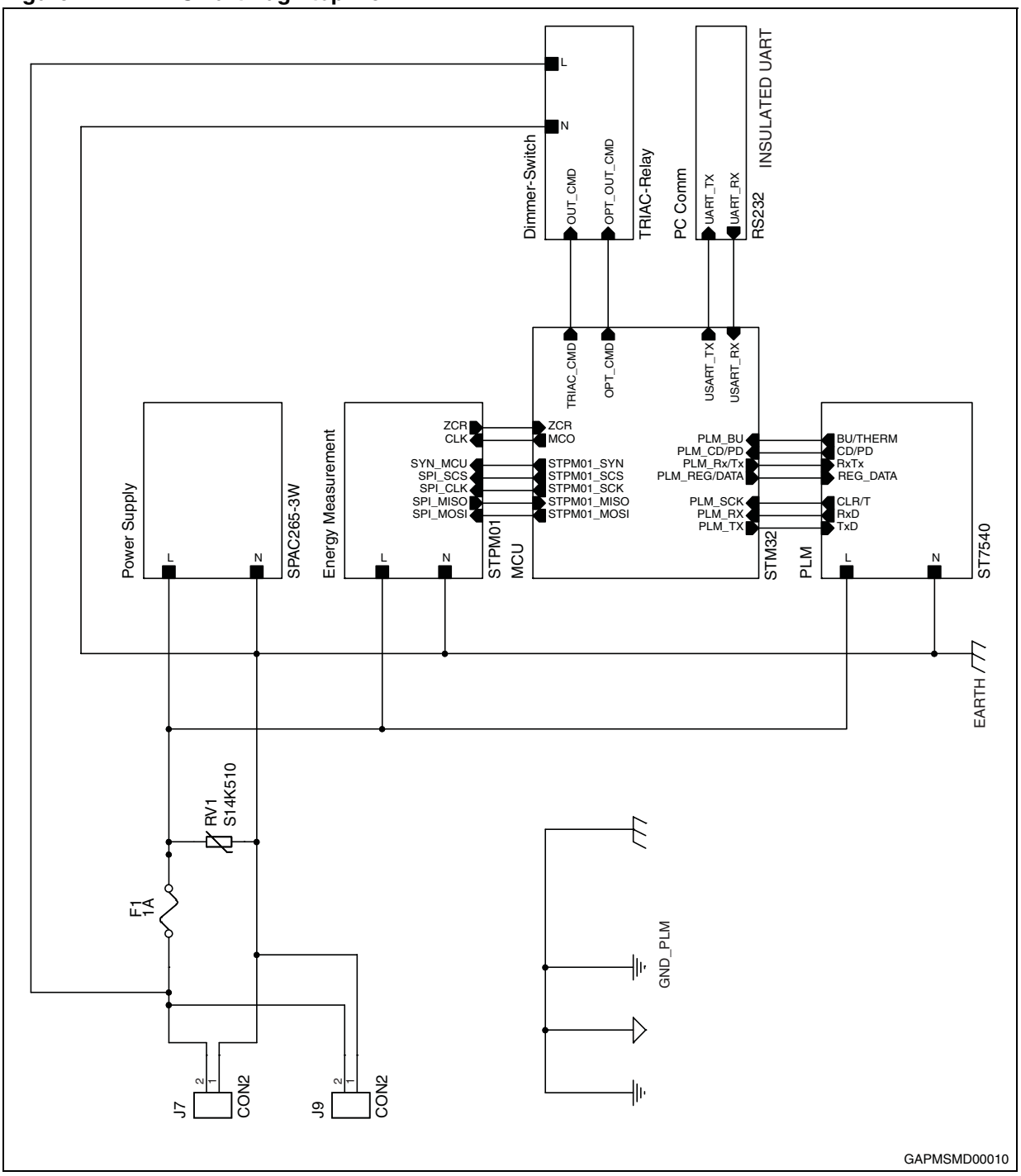

Figure 2. PLM SmartPlug - serial communication

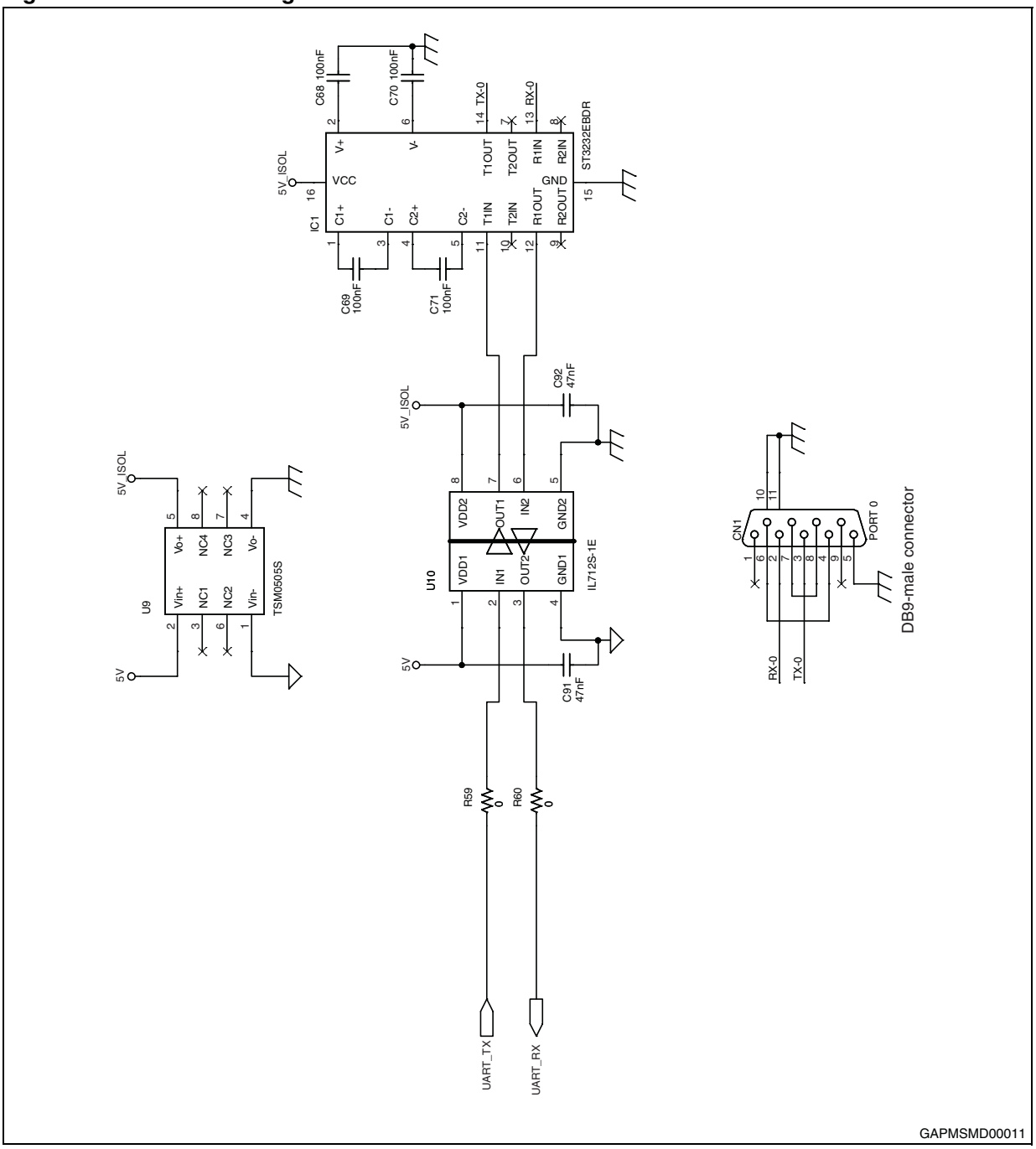

Figure 3. PLM SmartPlug - power supply

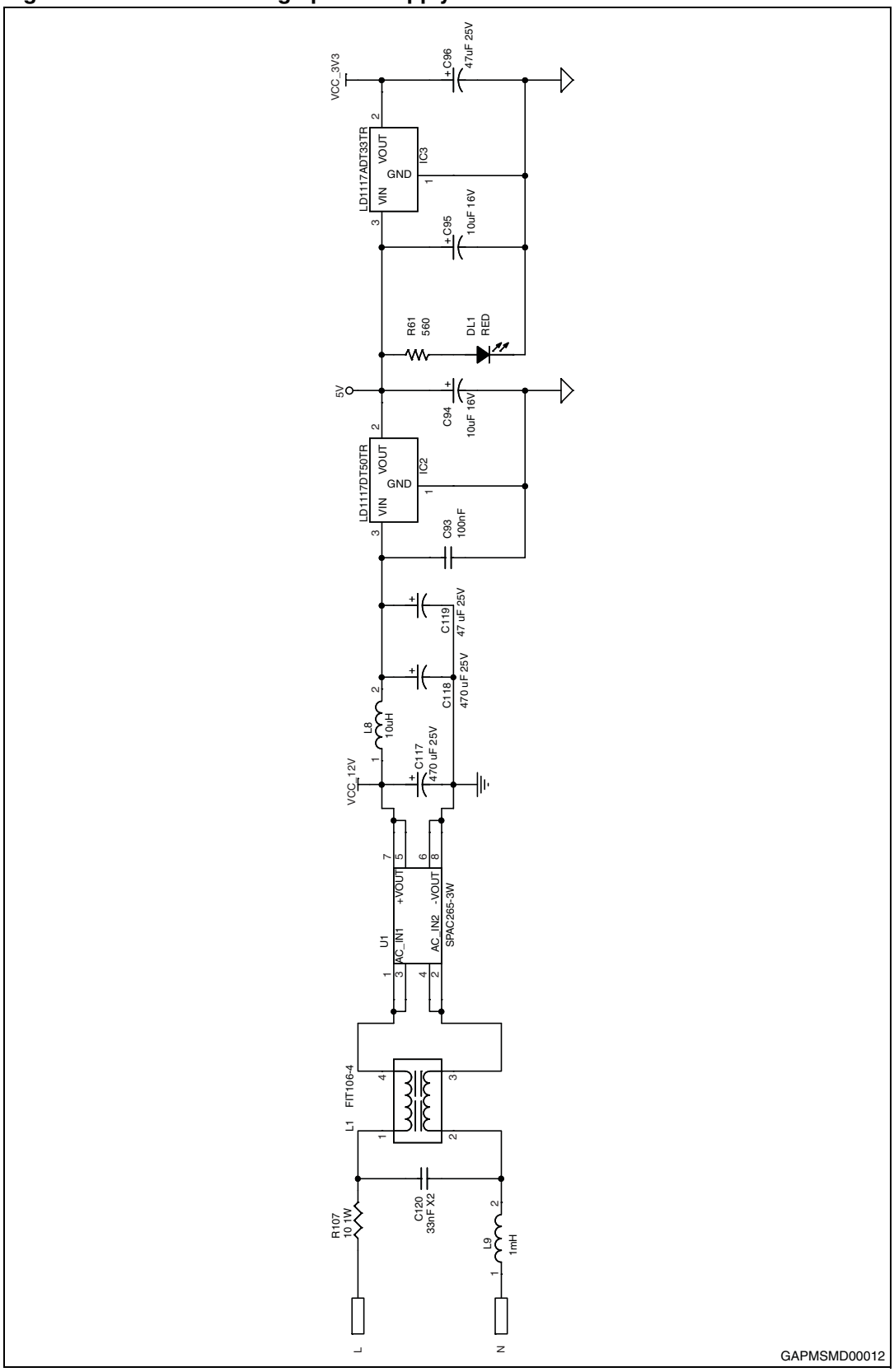

Figure 4. PLM SmartPlug - PLM communication

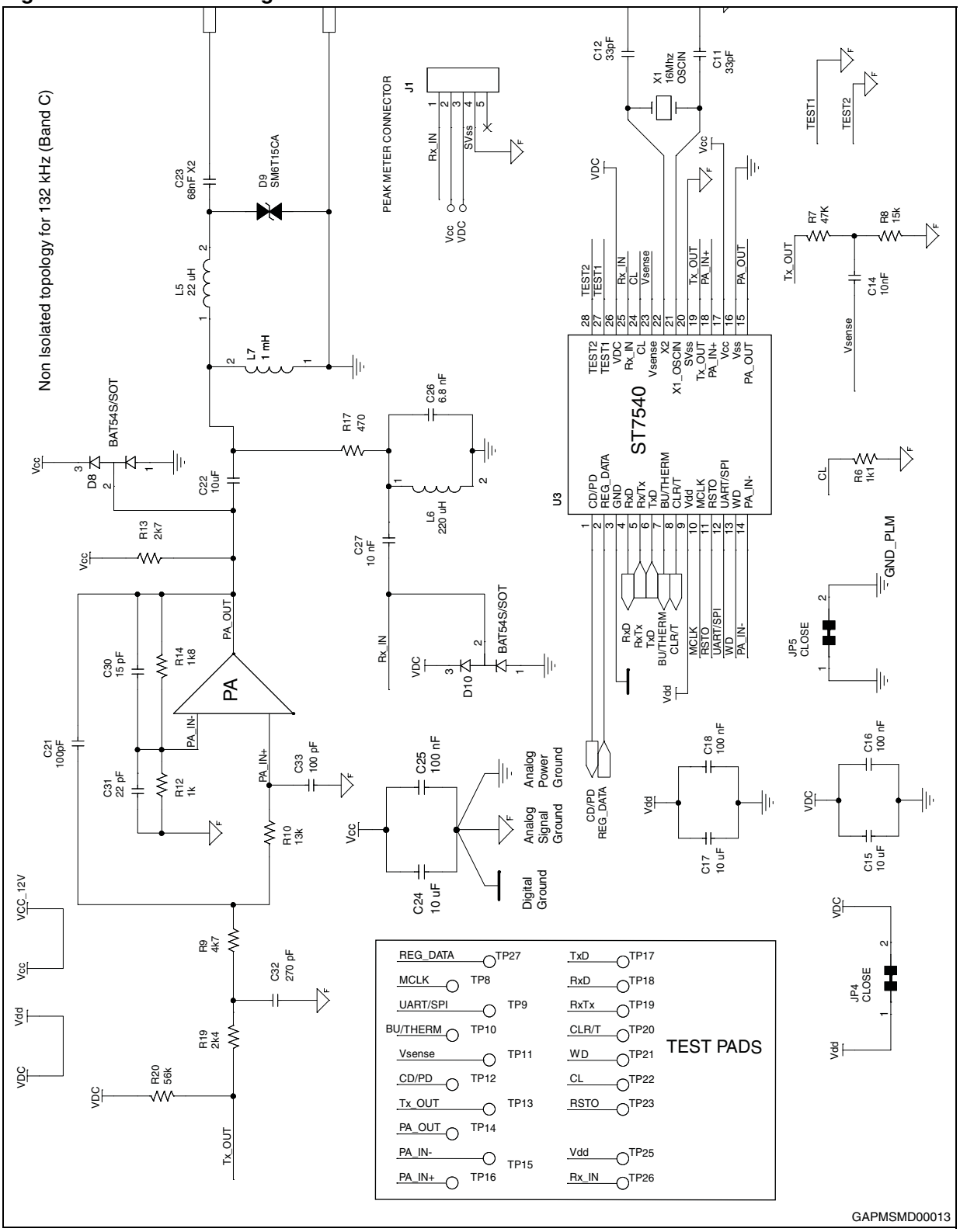

Figure 5. PLM SmartPlug - MCU

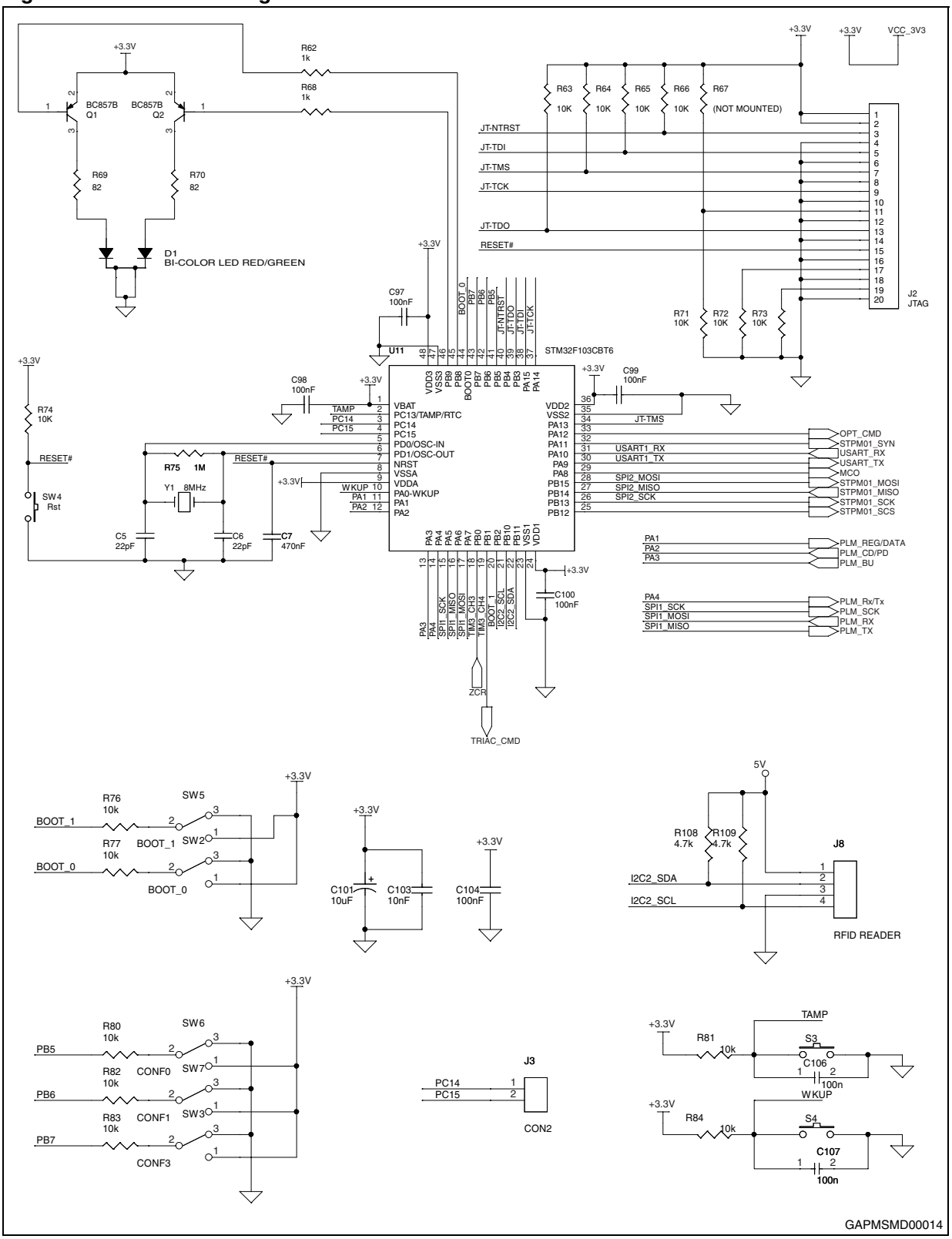

Figure 6. PLM SmartPlug - energy meter

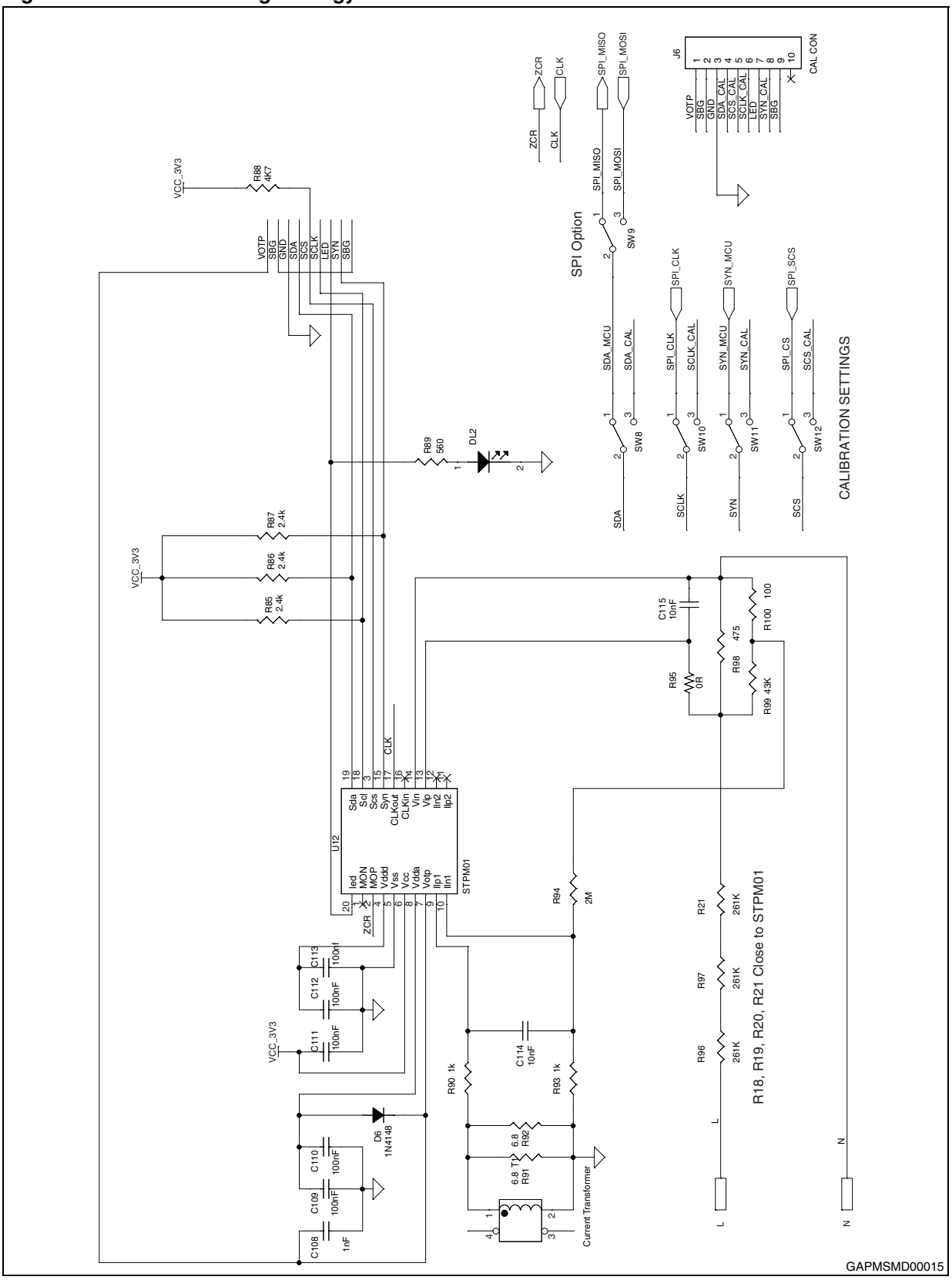

Figure 7. PLM SmartPlug - dimmer, switch

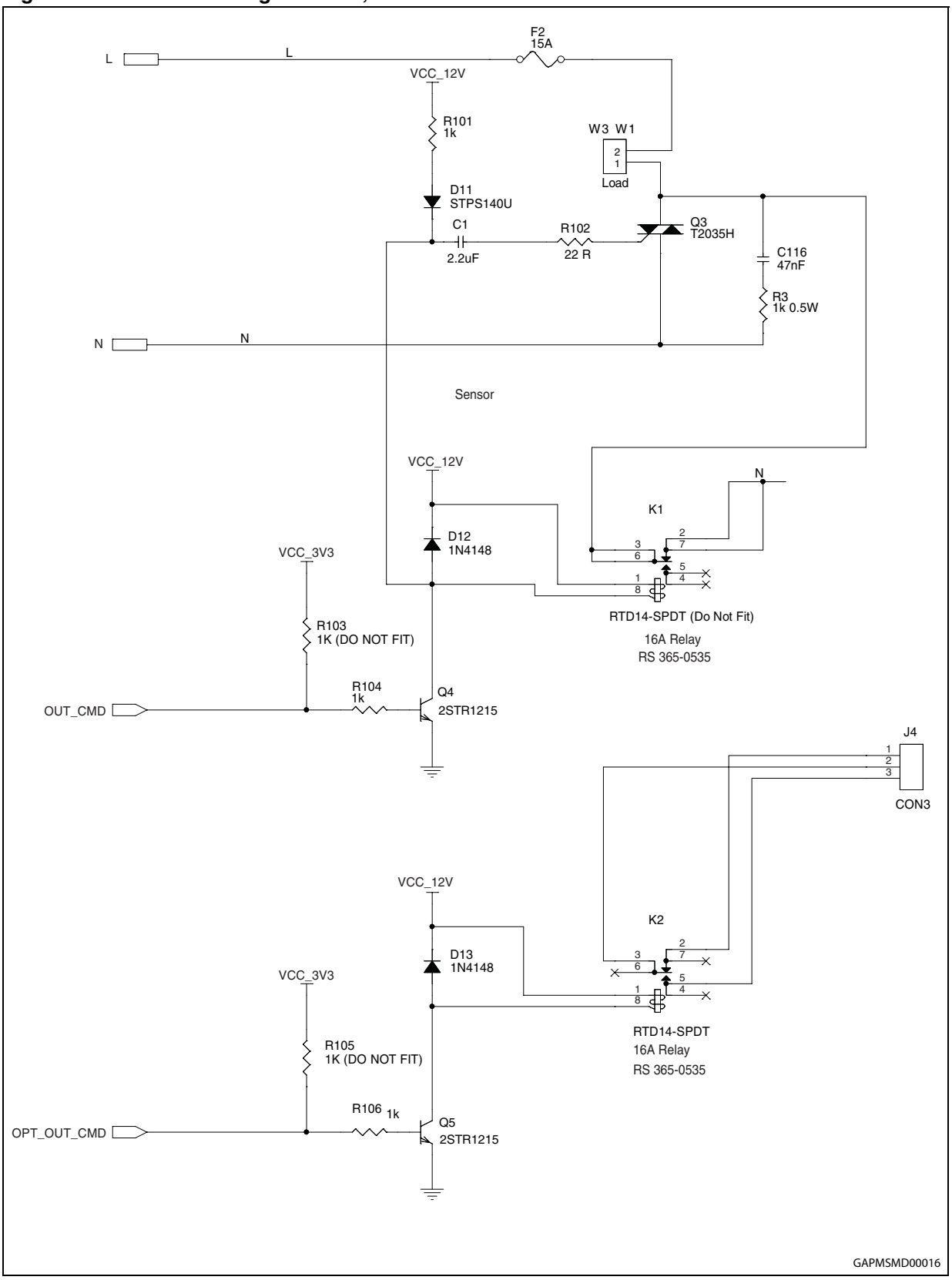

2 Revision history

Table 1. Document revision history

Date	Revision	Changes
17-Nov-2010	1	Initial release.
08-Mar-2011	2	– *Description on page 1*: Added reference to use of the STEVAL-IHP002V1 as a data concentrator. – Resized and reconfigured schematic diagrams to improve readability.

Please Read Carefully:

Information in this document is provided solely in connection with ST products. STMicroelectronics NV and its subsidiaries (“ST”) reserve the right to make changes, corrections, modifications or improvements, to this document, and the products and services described herein at any time, without notice.

All ST products are sold pursuant to ST’s terms and conditions of sale.

Purchasers are solely responsible for the choice, selection and use of the ST products and services described herein, and ST assumes no liability whatsoever relating to the choice, selection or use of the ST products and services described herein.

No license, express or implied, by estoppel or otherwise, to any intellectual property rights is granted under this document. If any part of this document refers to any third party products or services it shall not be deemed a license grant by ST for the use of such third party products or services, or any intellectual property contained therein or considered as a warranty covering the use in any manner whatsoever of such third party products or services or any intellectual property contained therein.

UNLESS OTHERWISE SET FORTH IN ST’S TERMS AND CONDITIONS OF SALE ST DISCLAIMS ANY EXPRESS OR IMPLIED WARRANTY WITH RESPECT TO THE USE AND/OR SALE OF ST PRODUCTS INCLUDING WITHOUT LIMITATION IMPLIED WARRANTIES OF MERCHANTABILITY, FITNESS FOR A PARTICULAR PURPOSE (AND THEIR EQUIVALENTS UNDER THE LAWS OF ANY JURISDICTION), OR INFRINGEMENT OF ANY PATENT, COPYRIGHT OR OTHER INTELLECTUAL PROPERTY RIGHT.

UNLESS EXPRESSLY APPROVED IN WRITING BY AN AUTHORIZED ST REPRESENTATIVE, ST PRODUCTS ARE NOT RECOMMENDED, AUTHORIZED OR WARRANTED FOR USE IN MILITARY, AIR CRAFT, SPACE, LIFE SAVING, OR LIFE SUSTAINING APPLICATIONS, NOR IN PRODUCTS OR SYSTEMS WHERE FAILURE OR MALFUNCTION MAY RESULT IN PERSONAL INJURY, DEATH, OR SEVERE PROPERTY OR ENVIRONMENTAL DAMAGE. ST PRODUCTS WHICH ARE NOT SPECIFIED AS "AUTOMOTIVE GRADE" MAY ONLY BE USED IN AUTOMOTIVE APPLICATIONS AT USER’S OWN RISK.

Resale of ST products with provisions different from the statements and/or technical features set forth in this document shall immediately void any warranty granted by ST for the ST product or service described herein and shall not create or extend in any manner whatsoever, any liability of ST.

ST and the ST logo are trademarks or registered trademarks of ST in various countries.

Information in this document supersedes and replaces all information previously supplied.

The ST logo is a registered trademark of STMicroelectronics. All other names are the property of their respective owners.

© 2011 STMicroelectronics - All rights reserved

STMicroelectronics group of companies

Australia - Belgium - Brazil - Canada - China - Czech Republic - Finland - France - Germany - Hong Kong - India - Israel - Italy - Japan - Malaysia - Malta - Morocco - Philippines - Singapore - Spain - Sweden - Switzerland - United Kingdom - United States of America

www.st.com