STEVAL-MKI128V5

ST MEMS sensor module

Data brief

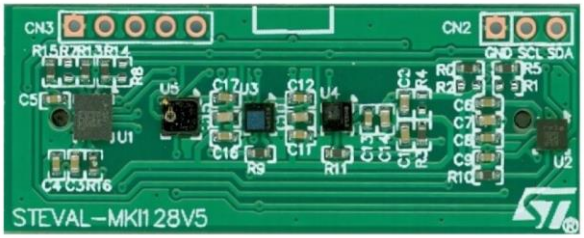

Features

- Analog supply voltage: 1.91 V to 3.6 V
- Digital supply voltage I/OS: 1.8 V
- Power-down, "always on" eco power mode
- Motion MEMS sensors:
  - 3D accelerometer sensor ±2/±4/±8/±16g selectable full-scale acceleration range
  - 3D gyroscope sensor ±125/±245/±500/±1000/±2000dps selectable full-scale angular rate range
  - 3D magnetometer ±4/±8/±12/±16gauss selectable full-scale magnetic field range
- Environmental sensors:
  - High accuracy pressure sensor
  - Piezo-resistive pressure sensor
  - 260-1260 mbar absolute pressure range
  - Low power consumption
  - Low noise (0.0075 hPa RMS)
- Humidity and temperature sensor
  - 0 to 100% RH range
  - -40 to +85 °C temperature range
  - 16 bit ADC measurement
- Digital UV index sensor
  - 0-15 UV index output range
  - Resolution UVI/16
  - Selectable readout: 1 Hz ODR / one shot
- ECOPACK®, RoHS, and "Green" compliant

Applications

- Tablets and mobile phones
- Gaming and virtual reality input devices
- Wellness and wearable devices
- Drones and robotics
- IoT devices such as industrial and factory automation machines

Description

ST MEMS sensor module integrates the ST 3D accelerometer, 3D magnetometer, 3D gyroscope, pressure, relative humidity, ambient temperature and UV index sensors.

1 Introduction

STEVAL-MKI128V5 sensor module integrates a set of complementary motion and environmental sensors. It is a robust and easy-to-assemble building block for quick system prototyping.

The module features the following ST sensors:

- LSM6DS3H (3D Accelerometer + 3D Gyroscope
- LIS3MDL (3D magnetometer)
- LPS22HB (pressure)
- HTS221 (humidity + temperature)
- UVIS25 (UV index)

Each sensor has dedicated drivers available for the principal operating systems. The sensor module and accompanying software form a convenient sensor subsystem solution for developing gaming, augmented reality, indoor navigation and localization-based services.

Find the relevant sensor documentation on www.st.com.

2 Block diagram

Figure 1: MEMS module block diagram

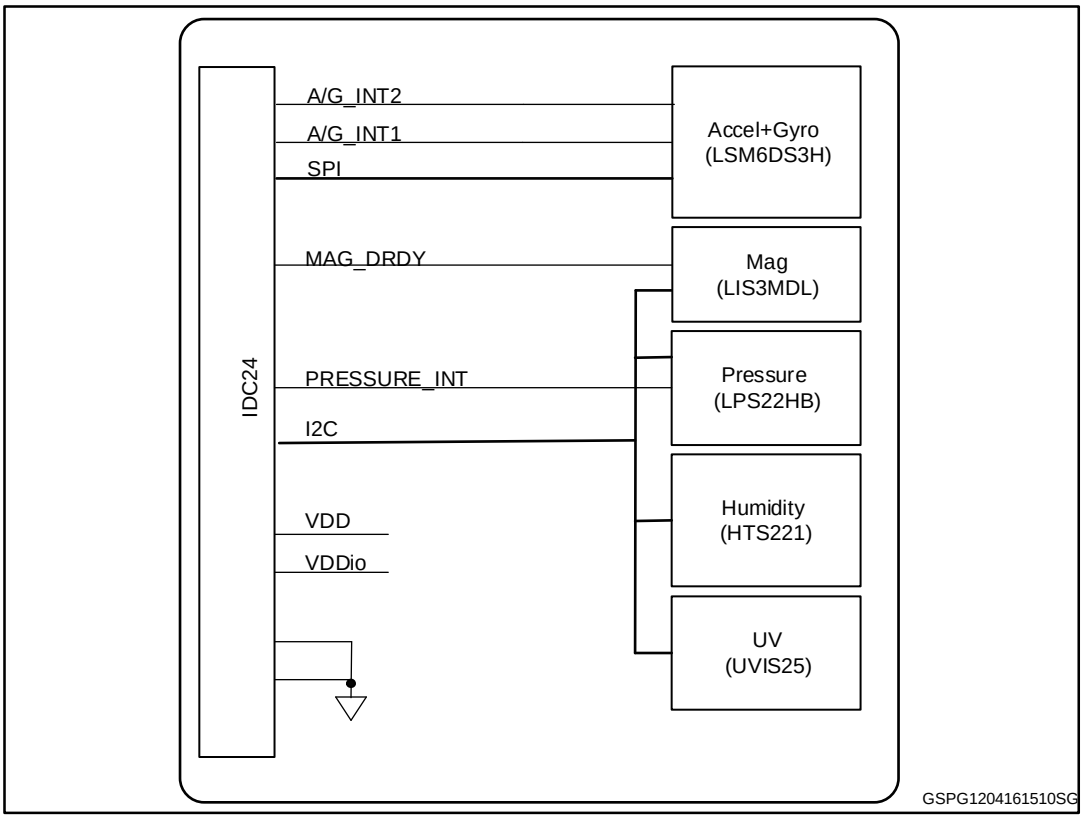

3 Application hints

Figure 2: Sensor module application example

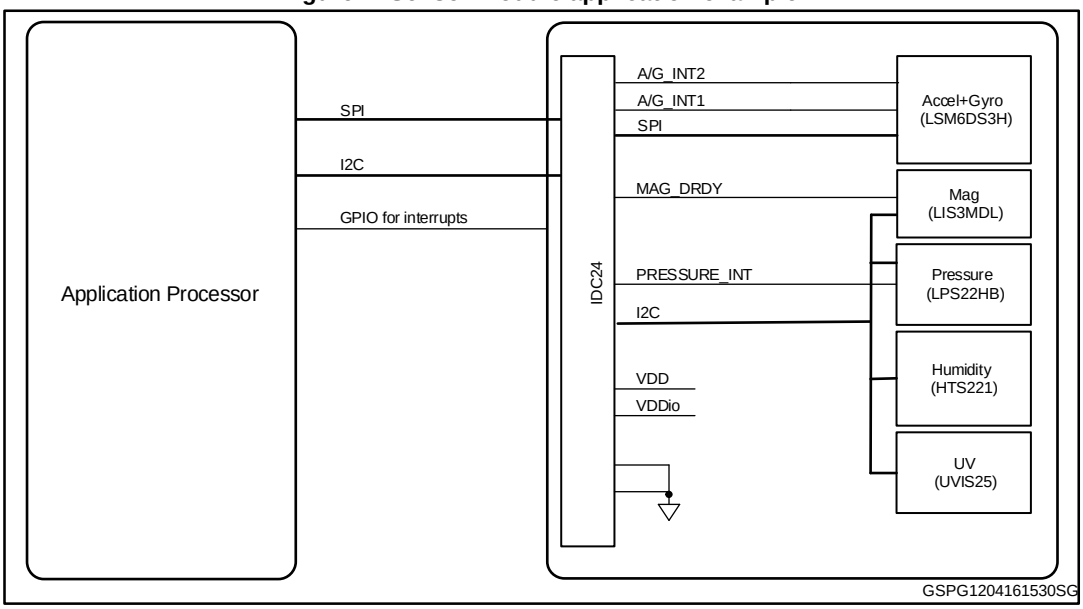

4 Schematic diagrams

Figure 3: Module schematic

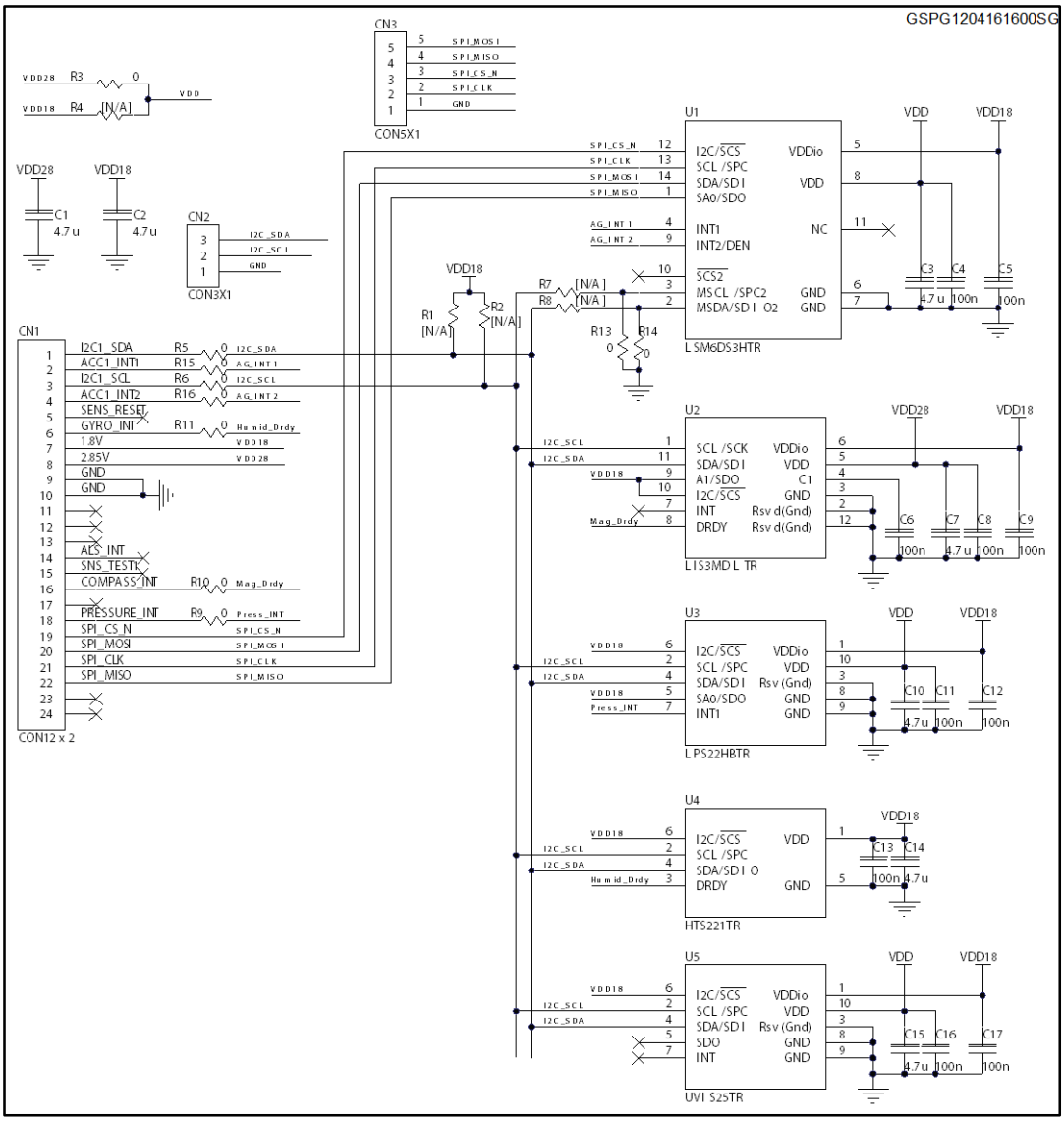

5 PCB overview

Figure 4: PCB top

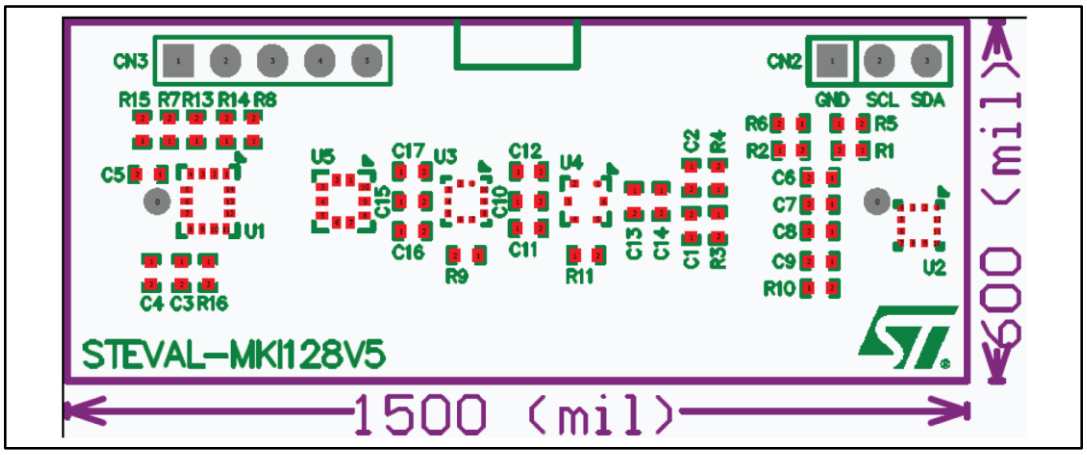

Figure 5: PCB bottom

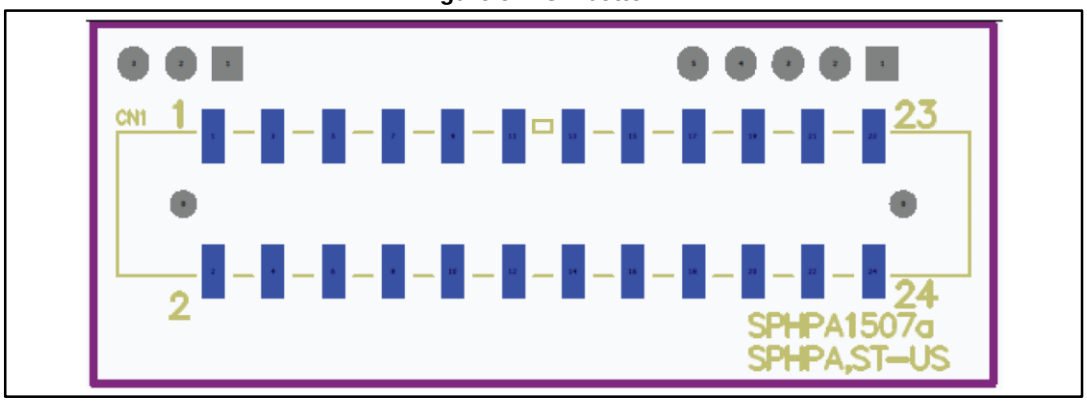

6 Revision history

Table 1: Document revision history

Date	Version	Changes
21-Apr-2016	1	Initial release.
18-Jul-2016	2	Updated -40 to +85°C temperature range feature on the cover page.