DRAWING MADE IN THIRD ANGLE PROJECTION

THIS DRAWING IS UNPUBLISHED. RELEASED FOR PUBLICATION ,19 .

© COPYRIGHT 19 BY AMP INCORPORATED. ALL INTERNATIONAL RIGHTS RESERVED.

LOC	DIST
CE	16

P	F	ZONE	LTR	DESCRIPTION	DATE	APPD
			C	REVISE PER 0A00-0567-98	14OCT98	JM/SB

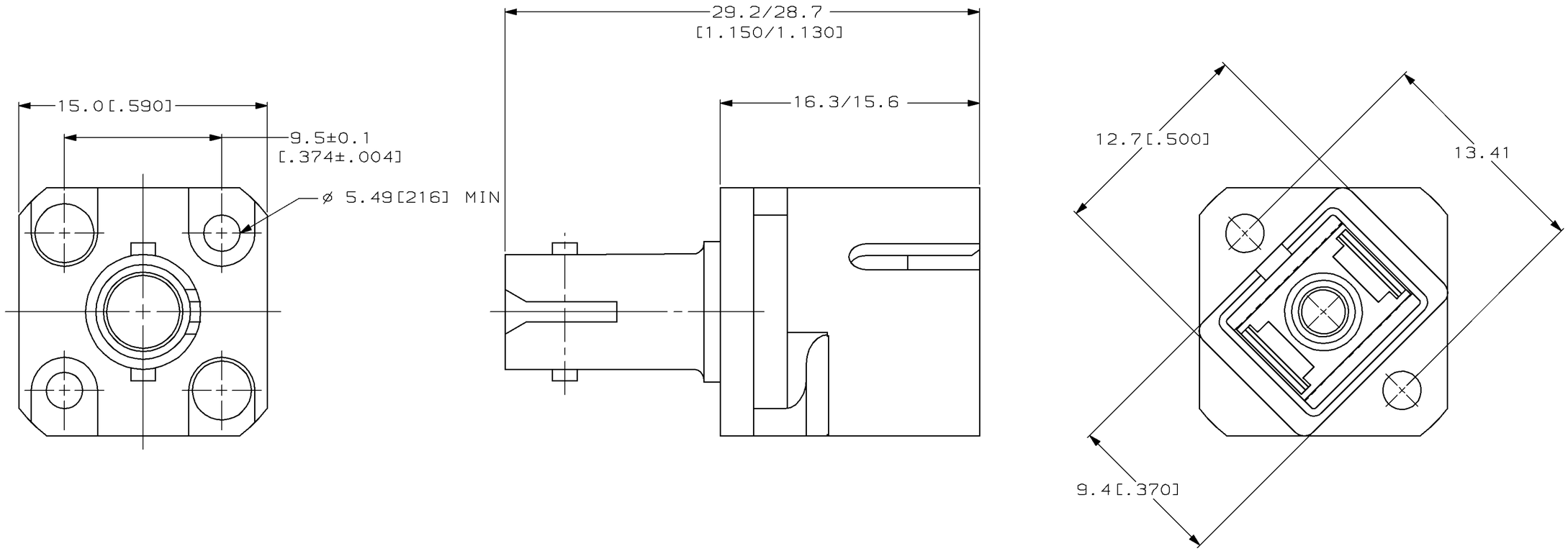

1. MATERIAL:
   BODY: ZINC DIECAST
   SLEEVE: METAL
   SLEEVE: CERAMIC
   DUST COVER: VINYL AND THERMOPLASTIC RUBBER
2. DUST COVERS NOT SHOWN.

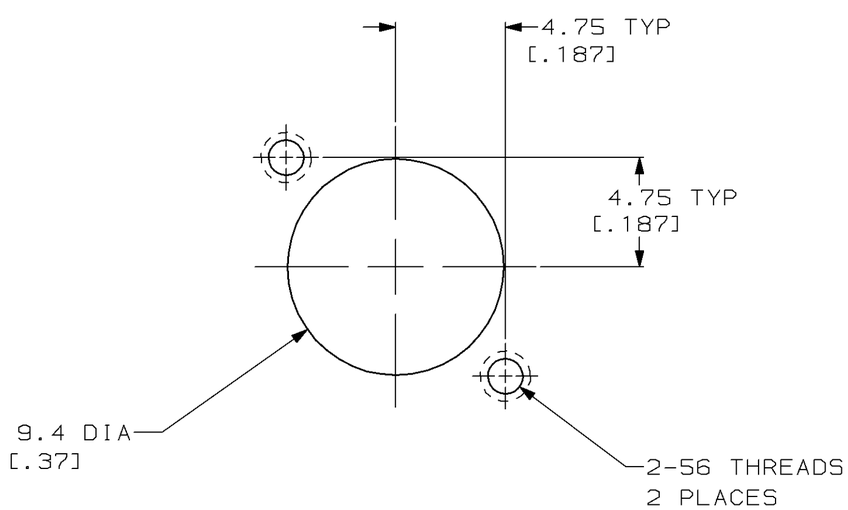

RECOMMENDED
MOUNTING PATTERN

CERAMIC	503638-2
METAL	503638-1
ALIGNMENT SLEEVE	PART NO

DO NOT SCALE PRINT.
UNLESS SPECIFIED
DIMENSIONS IN MM[INCHES].
TOLERANCES ON :
2 PLC DEC ± 0.13[.005]
3 PLC DEC ± -
ANGLES ± -

MATERIAL 1

FINISH BODY: NICKEL

DR 6-24-94 B.BRIGGS
CHK 6-24-94 B.BRIGGS
APPD 6-24-94 S.WILCOX
APPD 6-24-94 D.STAKEM
PRODUCT SPEC -
APPLICATION SPEC -
WEIGHT -

AMP Incorporated
Harrisburg, PA 17105-3608

NAME
ASSEMBLY, COUPLING BUSHING, 2.5mm
BAYONET TO AMP SC

SIZE C | CAGE CODE 00779 | DRAWING NO C-503638
SCALE 5:1 | SHEET 1 OF 1

METRIC

THIS DRAWING IS A CONTROLLED DOCUMENT FOR AMP INCORPORATED. IT IS SUBJECT TO CHANGE AND THE CONTROLLING ENGINEERING ORGANIZATION SHOULD BE CONTACTED FOR THE LATEST REVISION.

CUSTOMER DRAWING

503638

AMP 1471-6 REV 3-92

14-OCT-98 15:01:30 amp40972 /home/amp40972/edmmod