DRAWING MADE IN THIRD ANGLE PROJECTION
THIS DRAWING IS UNPUBLISHED. RELEASED FOR PUBLICATION ,19 .
© COPYRIGHT 19 BY AMP INCORPORATED. ALL INTERNATIONAL RIGHTS RESERVED.

LOC	DIST
AD	14

REVISIONS

ZONE	LTR	DESCRIPTION	DATE	APPD
	O	DWN PER 91-5256-020	1-92	JSD
	A	REVISED PER 0010-0365-95	6/27/95	RB JD
	B	REVISED PER 0010-0901-95	9/21/95	RB JD
	C	REVISED PER 0010-1475-95	11/29/95	RB DG
	D	REVISED PER 0430-0345-97	9/23/97	RB MP
	E	REVISED PER 0430-0323-97	9/23/97	RB MP

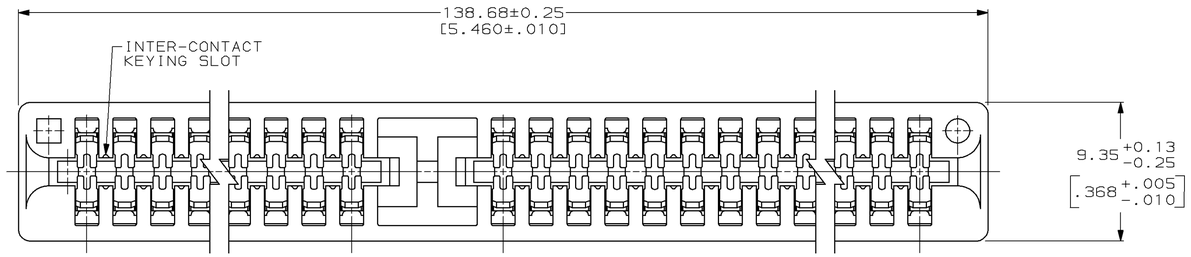

1. HOUSING MATERIAL: GLASS FILLED POLYESTER, IR REFLOW COMPATIBLE, COLOR: GRAY.
2. CONTACT: PHOSPHOR BRONZE.
3. NICKEL PLATE: 0.00127 [.000050] MIN - ALL OVER.
4. TIN-LEAD PLATE: 0.00254 [.000100] MIN - SOLDER POSTS.
5. GOLD PLATE: 0.00076 [.000030] MIN - CONTACT AREA.
6. NICKEL PLATE PER MIL-G-45204. GOLD PLATE PER QQ-N-290.
7. PART NUMBER, DATE CODE AND CSA LOGO ARE MARKED IN APPROXIMATE AREA SHOWN, EITHER SIDE.
8. RECOMMENDED PCB FINISHED HOLE DIA: 1.02±0.08 [.040±.003].
9. THE RETENTIVE FEATURE OF THIS CONNECTOR IS DESIGNED FOR FULL SEATING IN .062±.008 THICK CIRCUIT BOARDS. FOR APPLICATIONS IN BOARDS OF OTHER THICKNESSES CONTACT AMP INCORPORATED.

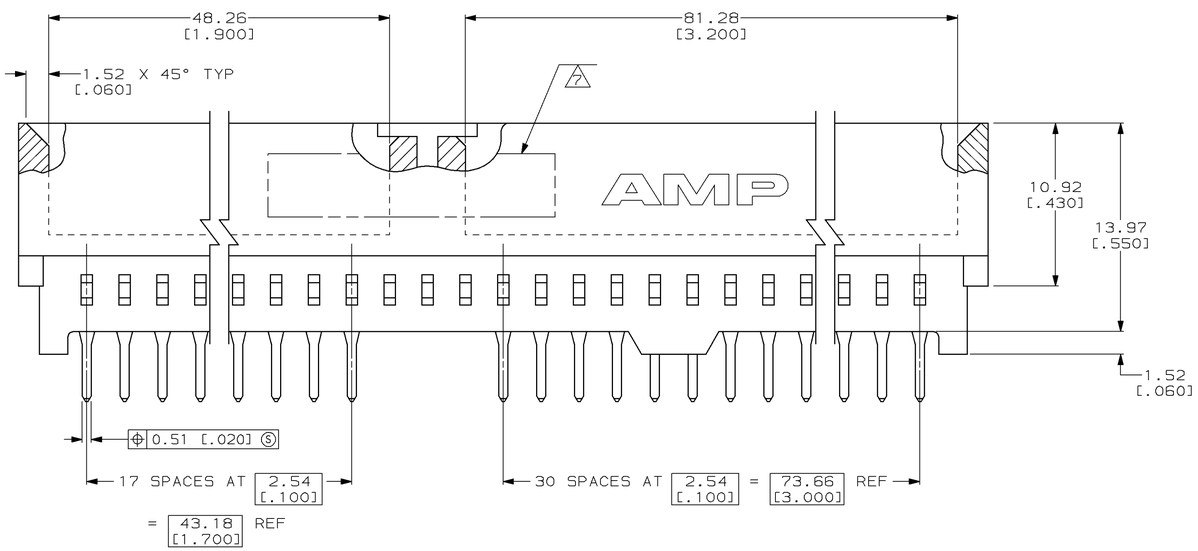

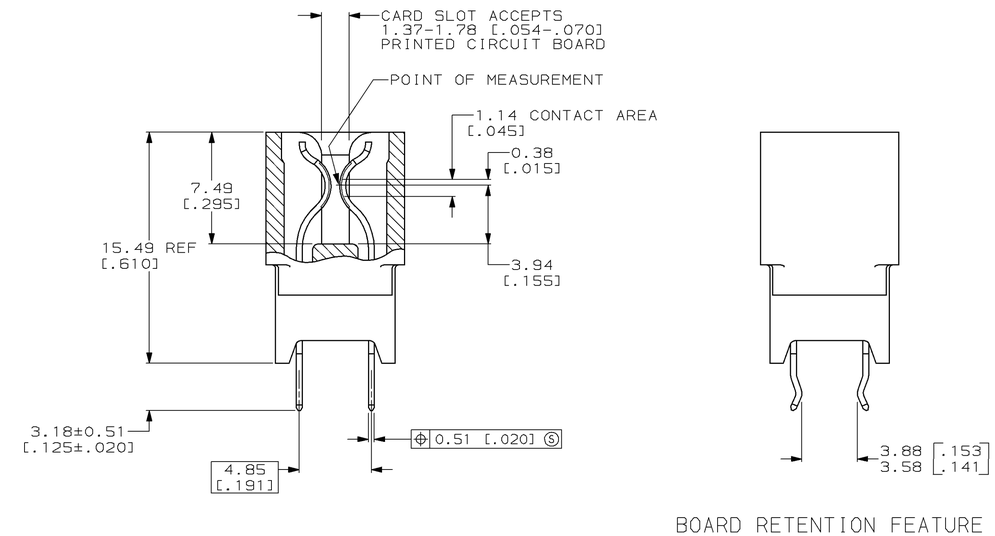

BOARD RETENTION FEATURE

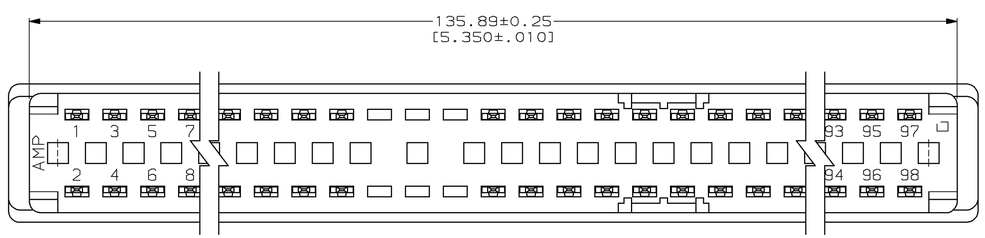

	PACKAGE	BOARD RETENTION LOCATION	NO OF POSN	PART NUMBER
OBSOLETE	~~TUBE~~	~~NONE~~	~~49~~	~~536128-3~~
OBSOLETE	~~TUBE~~	~~3 6, 41, 42, 51, 52, 93 96~~	~~49~~	~~536128-2~~
	TRAY	NONE	49	536128-1

DO NOT SCALE PRINT.
UNLESS SPECIFIED
DIMENSIONS IN mm [INCHES]
TOLERANCES ON :
2 PLC DEC ± 0.13 [.005]
3 PLC DEC ± -
ANGLES ± -

MATERIAL 1 2

FINISH 3 4 5 6

DR 10/29/91 R.SHIREY/UTA
CHK 1-30-92 J DIORAZIO
APPD 1-30-92 J DIORAZIO
APPD 1-30-92 M THUMMA
PRODUCT SPEC 108-9039
APPLICATION SPEC -
WEIGHT -

AMP Incorporated
Harrisburg, PA 17105-3608

NAME
CONNECTOR ASSEMBLY,
STANDARD EDGE II,
2.54 [.100] ℄,
18/31 POSITION HI-TEMP

SIZE D | CAGE CODE 00779 | DRAWING NO 536128
SCALE 5:1 | SHEET 1 OF 1

METRIC

CUSTOMER DRAWING