THIS DRAWING IS UNPUBLISHED. RELEASED FOR PUBLICATION
© COPYRIGHT — BY TYCO ELECTRONICS CORPORATION. ALL RIGHTS RESERVED.

LOC	DIST
CM	0

REVISIONS

P	LTR	DESCRIPTION	DATE	DWN	APVD
	S	ECO-07-012897	26JUN07	KW	DB

1. MATERIAL:
   CONNECTOR: POLYESTER UL94V-0 (BLUE).
   CONTACTS: 0.30 [.012] THK COPPER ALLOY.
2. CONTACT ACCEPT #26 AWG WIRE WITH 2.41 [.095] MAXIMUM INSULATION DIAMETER.
3. CONNECTOR MATES WITH 1.57±0.20[.062±.008] THICK PC BOARD.
4. HOUSING FEATURES: CLOSED END, STANDARD MOUTH WITHOUT MOUNTING EARS.

(5) CONTACT FINISH: BRIGHT TIN—LEAD 0.00203[.000080] MIN THK.

(6) CONTACT FINISH: MATTE WHISKER MITIGATED TIN 0.00203[.000080] MIN THICKNESS OVER NICKEL UNDERPLATE.

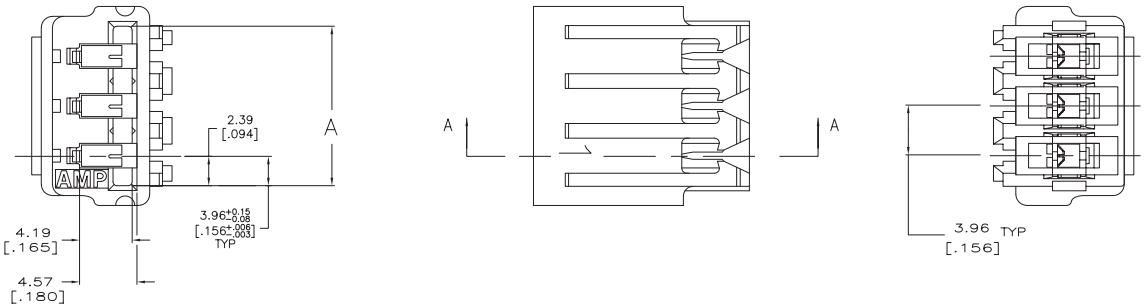

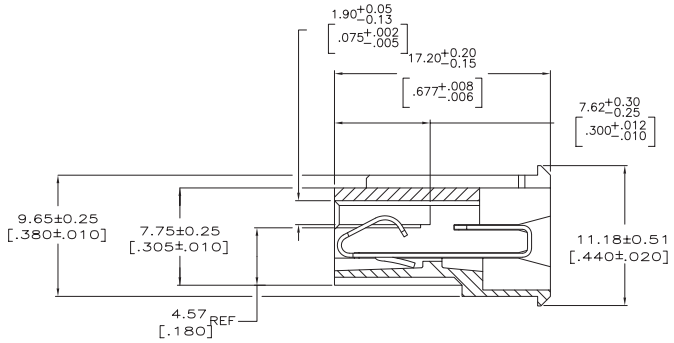

SECTION A—A

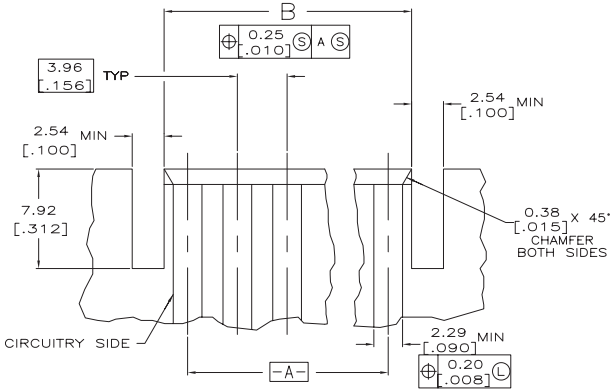

RECOMMENDED P.C. BOARD LAYOUT

	B	A	NO. OF CIRCUITS	PART NUMBER
(6)	95.50 [3.760]	95.91 [3.776]	24	5-640863-4
	91.54 [3.604]	91.95 [3.620]	23	5-640863-3
	87.58 [3.448]	87.99 [3.464]	22	5-640863-2
	83.62 [3.292]	84.02 [3.308]	21	5-640863-1
	79.65 [3.136]	80.06 [3.152]	20	5-640863-0
	71.73 [2.824]	72.14 [2.840]	18	4-640863-8
	59.84 [2.356]	60.25 [2.372]	15	4-640863-5
	47.96 [1.888]	48.36 [1.904]	12	4-640863-2
	36.07 [1.420]	36.47 [1.436]	9	3-640863-9
	24.18 [.952]	24.59 [.968]	6	3-640863-6
	12.29 [.484]	12.70 [.500]	3	3-640863-3
(5)	95.50 [3.760]	95.91 [3.776]	24	2-640863-4
	91.54 [3.604]	91.95 [3.620]	23	2-640863-3
	87.58 [3.448]	87.99 [3.464]	22	2-640863-2
	83.62 [3.292]	84.02 [3.308]	21	2-640863-1
	79.65 [3.136]	80.06 [3.152]	20	2-640863-0
	71.73 [2.824]	72.14 [2.840]	18	1-640863-8
	59.84 [2.356]	60.25 [2.372]	15	1-640863-5
	47.96 [1.888]	48.36 [1.904]	12	1-640863-2
	36.07 [1.420]	36.47 [1.436]	9	640863-9
	24.18 [.952]	24.59 [.968]	6	640863-6
	12.29 [.484]	12.70 [.500]	3	640863-3
CONTACT FINISH				

THIS DRAWING IS A CONTROLLED DOCUMENT.

DIMENSIONS: mm [INCHES]

TOLERANCES UNLESS OTHERWISE SPECIFIED:
0 PLC ± —
1 PLC ± —
2 PLC ± 0.13 [.005]
3 PLC ± —
4 PLC ± —
ANGLES ± —

MATERIAL SEE NOTE 1

FINISH SEE NOTE 1

DWN K. SALMON 10-23-91
CHK R. SWING 10-23-91
APVD —
PRODUCT SPEC —
APPLICATION SPEC —
WEIGHT —

CUSTOMER DRAWING

Tyco Electronics Corporation
Harrisburg, Pa 17105-3608

NAME
MTA-156
CARD EDGE CONNECTOR ASSEMBLY, 26 AWG

SIZE	CAGE CODE	DRAWING NO	RESTRICTED TO
A1	00779	C-640863	—

SCALE 5:1 SHEET 1 OF 1 REV S

METRIC