DRAWING MADE IN THIRD ANGLE PROJECTION

THIS DRAWING IS UNPUBLISHED. | RELEASED FOR PUBLICATION ,19 .

© COPYRIGHT 19 BY AMP INCORPORATED,HARRISBURG,PA. ALL INTERNATIONAL RIGHTS RESERVED. AMP PRODUCTS MAY BE COVERED BY U.S. AND FOREIGN PATENTS AND/OR PATENTS PENDING.

LOC	DIST			REVISIONS			
BD	77	P	F	ZONE	LTR	DESCRIPTION	DATE	APPD
					E	REV PER EC 0020-983-95	15 DEC 95	RT

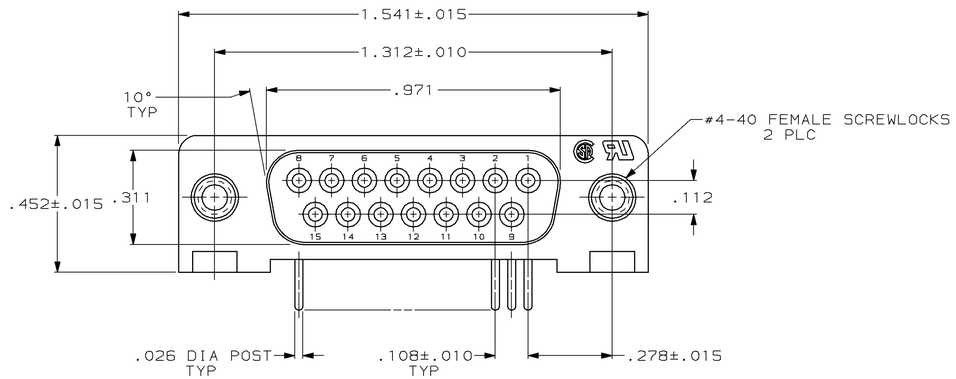

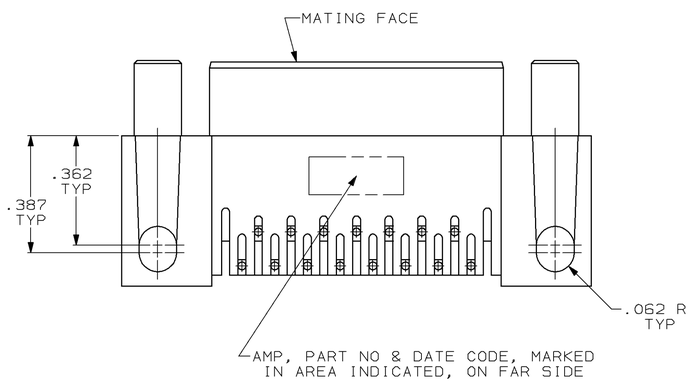

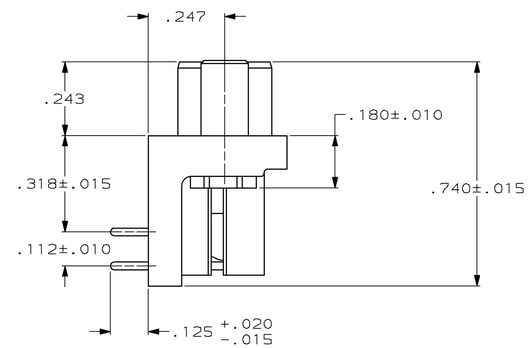

1. FLAME RETARDANT, 94V-0 RATED, GLASS FILLED NYLON OR POLYESTER, COLOR: BLACK.
2. PHOS. BRONZE PER QQ-B-750.
3. REFER TO APPLICATION SPEC FOR RECOMMENDED P.C. BOARD MOUNTING DIMENSIONS FOR AUTOMATIC INSERTION.
4. GOLD PLATING PER MIL-G-45204, TIN PLATING PER MIL-T-10727, NICKEL PLATING PER QQ-N-290.
5. PLATED WITH GOLD FLASH FOR LENGTH OF .055 MIN FROM MATING END, WITH POINT OF MEASUREMENT .035 FROM MATING END OF CONTACT, .000100-.000200 TIN OR TIN-LEAD ON SOLDER END, ALL OVER .000050 NICKEL ON ENTIRE CONTACT.
6. PLATED WITH .000030 GOLD FOR LENGTH OF .055 MIN FROM MATING END, WITH POINT OF MEASUREMENT .035 FROM MATING END OF CONTACT, .000100-.000200 TIN OR TIN-LEAD ON SOLDER END, ALL OVER .000050 NICKEL ON ENTIRE CONTACT.

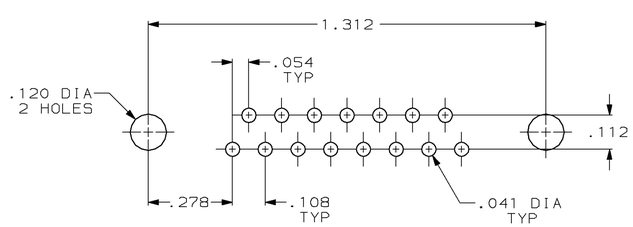

P.C. BOARD MOUNTING DIMENSIONS 3

	FINISH	PART NUMBER
	6	745396-2
SUPSD BY 745396-2	5	745396-1

UNLESS OTHERWISE SPECIFIED DIMENSIONS ARE IN INCHES
TOLERANCES ON :
2 PL DEC ±-
3 PL DEC ±.005
ANGLES ±2°

MATERIAL
MOLDED PARTS: 1
CONTACTS: 2
SCREWLOCKS: ZINC

FINISH 4
CONTACTS: SEE TABLE
SCREWLOCKS: CLEAR CHROMATE

DR 5-5-87 S.WELDON
CHK 5-5-87 C.RICHARD
APPD 5-5-87 B.TAYLOR
APPD 5-5-87 J.ASSINI
PRODUCT SPEC 108-40005
APPLICATION SPEC 114-40015
WEIGHT -

AMP | AMP INCORPORATED Harrisburg, Pa. 17105

NAME
RECEPTACLE ASSY, SIZE 2, 15 POSN, RIGHT ANGLE, .318 SERIES, .026 DIA POSTS, W/ FEMALE SCREWLOCKS, AMPLIMITE® HD-20

SIZE	FSCM NO	DRAWING NO
D	00779	745396
SCALE 4:1		SHEET 1 OF 1

CUSTOMER DRAWING

AMP 1756-3 REV 10-84

15-DEC-95 13:39:00 amp38585 /home/srv026d/dsk01/dept4023/amp38585/edmmod