DRAWING MADE IN THIRD ANGLE PROJECTION

THIS DRAWING IS UNPUBLISHED. RELEASED FOR PUBLICATION ,19 .
© COPYRIGHT 19 BY AMP INCORPORATED. ALL INTERNATIONAL RIGHTS RESERVED.

LOC	DIST
BD	48

REVISIONS

P	F	ZONE	LTR	DESCRIPTION	DATE	APPD
			A	REDRAWN	7-90	–
			B	REVISED PER ECN BD5388	11/27/91	RM
			C	REVISED PER EC 0020-1344-93	11/03/93	SB

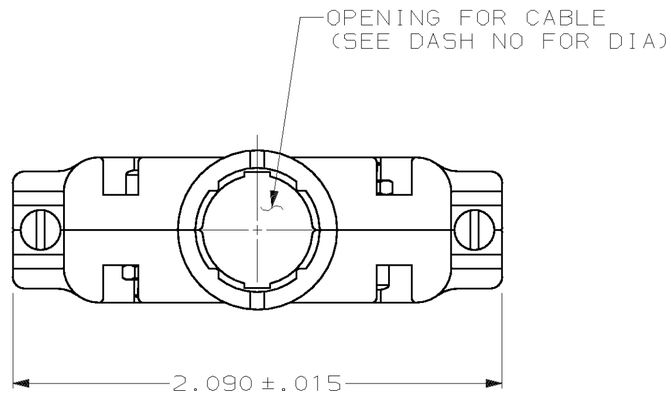

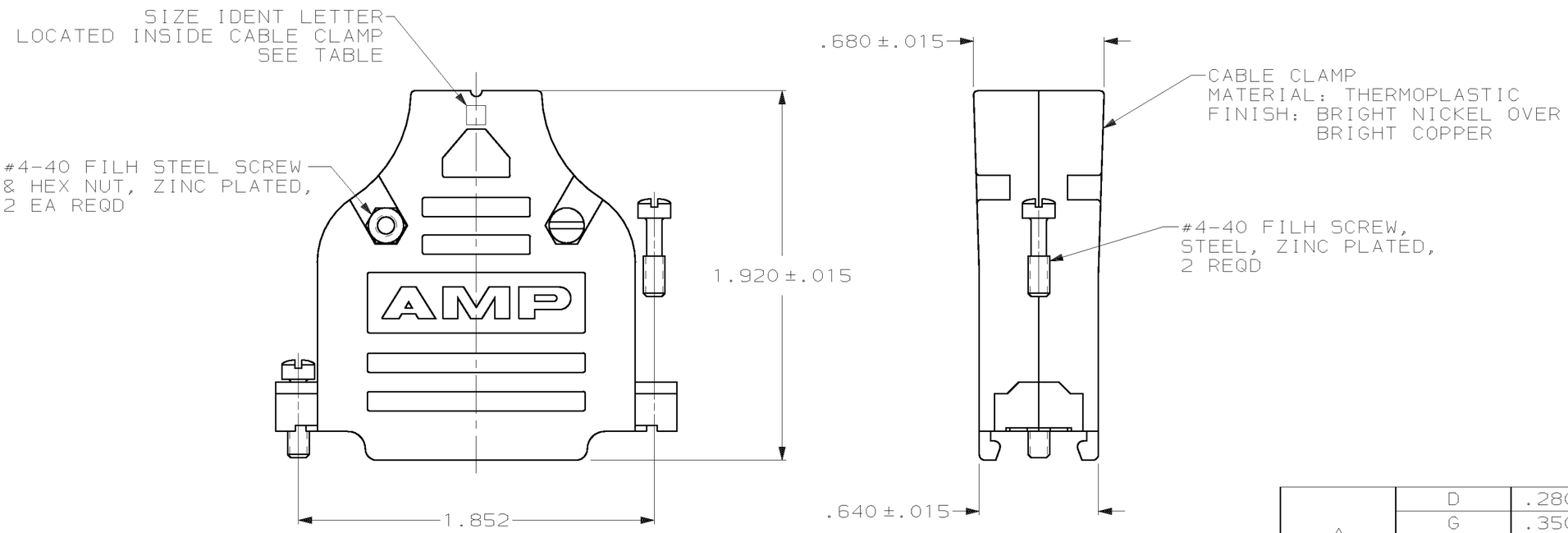

1	D	.280	4 1-745833-0	745833-9
	G	.350	4 745833-8	745833-7
	K	.430	4 745833-6	745833-5
	M	.480	4 745833-4	745833-3
	P	.530	4 745833-2	745833-1
REMARKS	SIZE IDENT LETTER	CABLE DIA	BULK PACKED KIT NO 3	INDIVIDUAL KIT NO 2

1. ALL PARTS PACKAGED UNASSEMBLED.
2. AS SHOWN ABOVE, THIS KIT CONSISTS OF 2 STRAIN RELIEF HALVES, 2 #4-40 SCREWS, 2 #4-40 NUTS & 2 #4-40 MOUNTING SCREWS.
3. SAME AS SHOWN EXCEPT: EACH PART IS INDIVIDUALLY BULK PACKED FOR MULTIPLE KIT ORDERS.
4. OBSOLETE.

DO NOT SCALE PRINT.
UNLESS SPECIFIED
DIMENSIONS IN INCHES
TOLERANCES ON :
2 PLC DEC ± -
3 PLC DEC ± .005
ANGLES ± -

MATERIAL: SEE CALLOUT

FINISH: SEE CALLOUT

DR 7-25-90 J GALLUCCI BG
CHK 9-10-90 J.McCLINTON
APPD 9-10-90 J.WESTMAN
APPD 9-11-90 J.ASSINI
PRODUCT SPEC –
APPLICATION SPEC –
WEIGHT –

AMP INCORPORATED
Harrisburg, Pa. 17105

NAME: CABLE CLAMP KIT, SIZE 3, 25 POSN, 180°, AMPLIMITE™ SERIES, PLATED PLASTIC

SIZE C | FSCM NO 00779 | DRAWING NO 745833
SCALE 2:1 | SHEET 1 OF 1

745833

AMP 1471-6 REV 3-89

CUSTOMER DRAWING