DRAWING MADE IN THIRD ANGLE PROJECTION

MOD	LOC	DIST
2	BD	39

THIS DRAWING IS UNPUBLISHED. RELEASED FOR PUBLICATION , 19 .

© COPYRIGHT 19 BY AMP INCORPORATED, HARRISBURG, PA. ALL INTERNATIONAL RIGHTS RESERVED. AMP PRODUCTS MAY BE COVERED BY U.S. AND FOREIGN PATENTS AND/OR PATENTS PENDING.

REVISIONS

P	F	ZONE	LTR	DESCRIPTION	DATE	APPROVED
0			O	RELEASED WAS 86-5520-5		
A			A	REVISED-ECN BD2607	11-30-88	
B			B	REV PER ECN BD2328	2-17-89	
			C	REV PER ECN BD4294	9-24-90	
			D	REVISED PER ECN BD6133	4-6-92	TMS

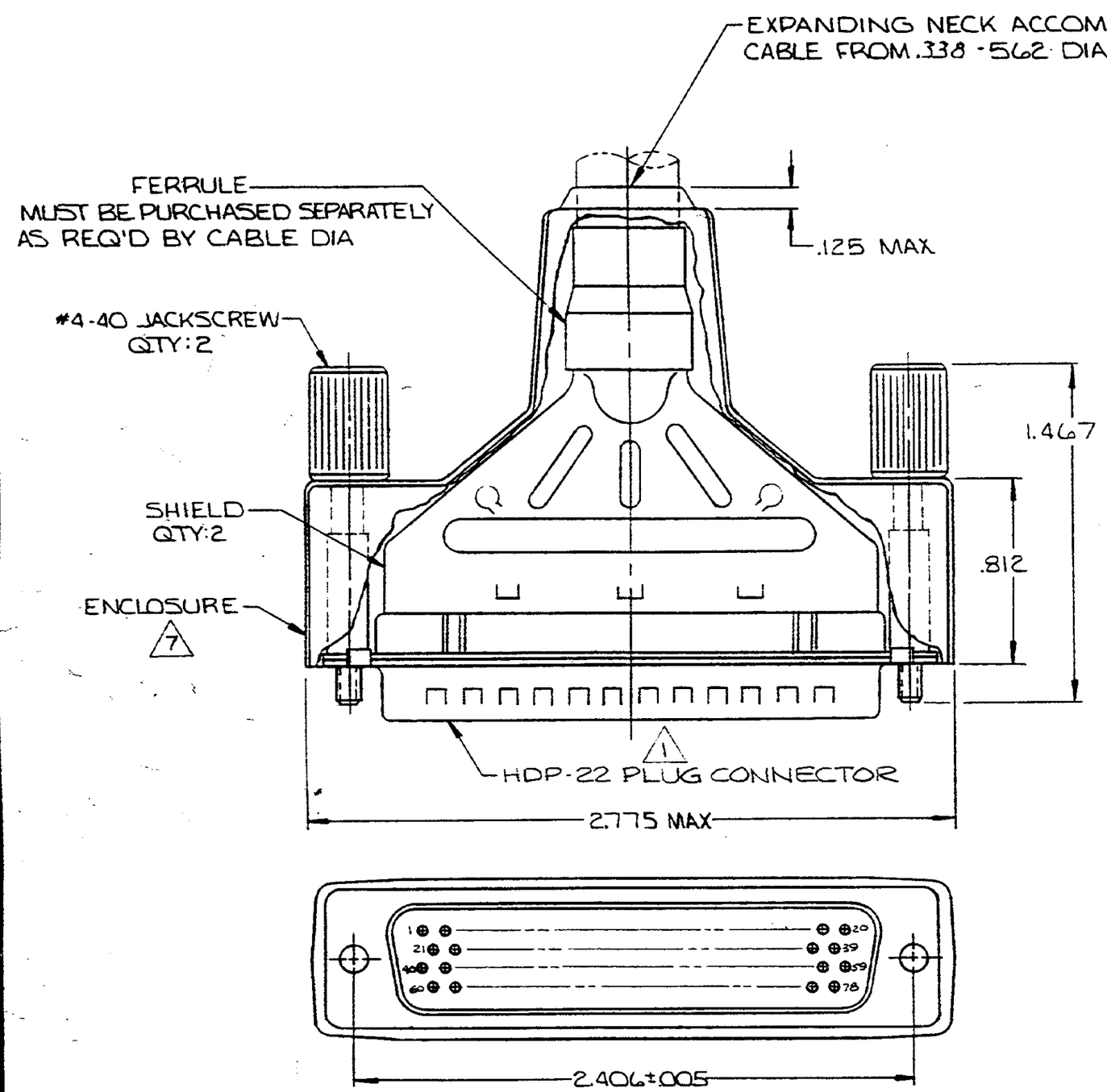

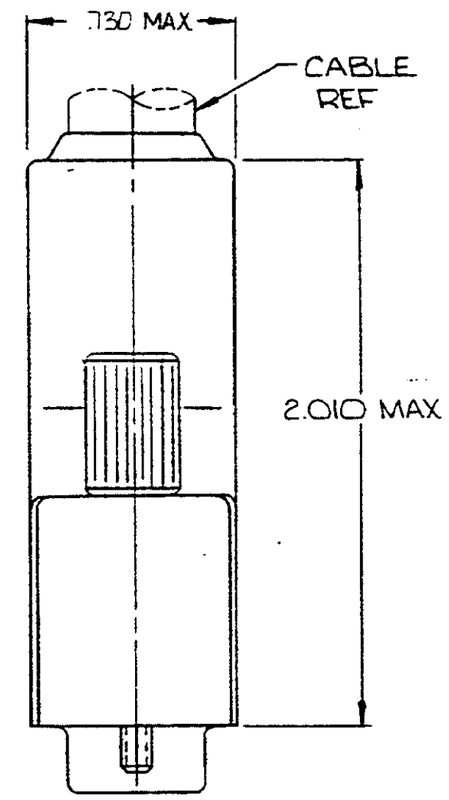

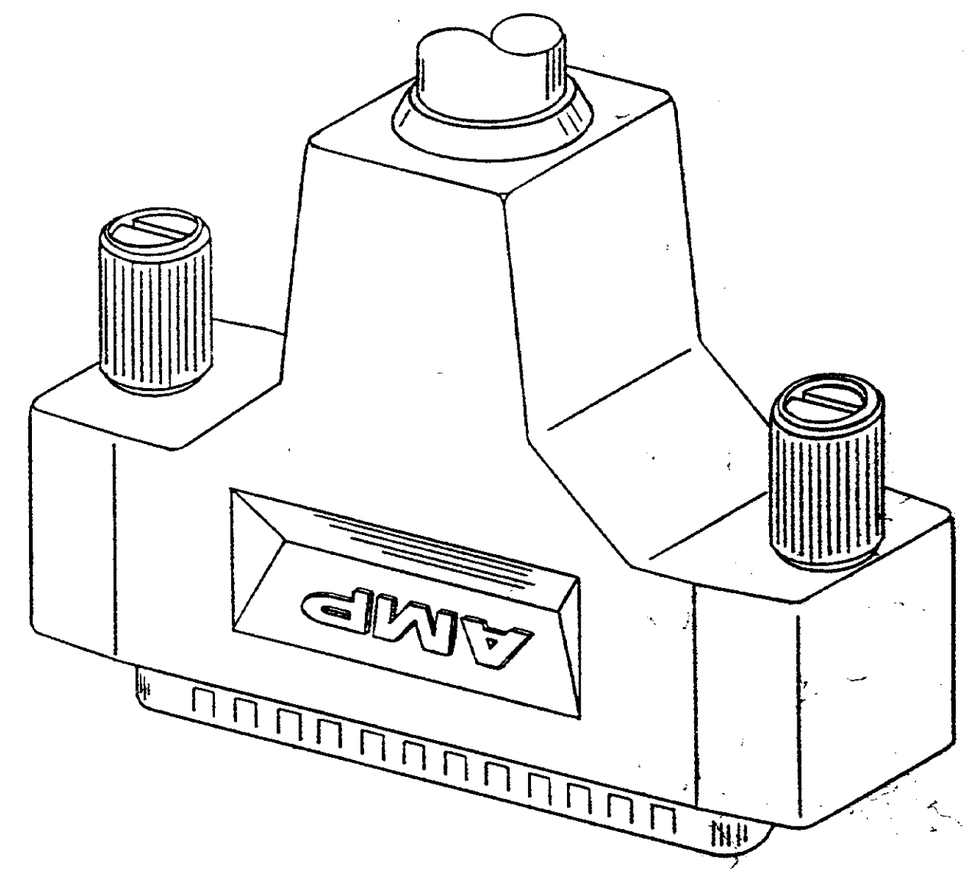

1. PLUG ACCEPTS SIZE 22 DF PIN CONTACTS, CONTACTS MUST BE PURCHASED SEPARATELY.
2. ALL PARTS SHIPPED UNASSEMBLED, EACH PART INDIVIDUALLY BULK PACKED.
3. FLAME RETARDANT 94V-0 RATED, GLASS-FILLED NYLON, COLOR: BLACK.
4. STEEL PER ASTM A109.
5. TIN PLATING PER MIL-T-10727.
6. ZINC PLATING PER ASTM B633, TYPE II, CLASS SC1, BLACK CHROMATE.
7. FLAME RETARDANT 94V-0 RATED, STYRENE POLYOLEFIN OR PVC, COLOR: BLACK.

748477-1

PART NO

UNLESS OTHERWISE SPECIFIED DIMENSIONS ARE IN INCHES.
TOLERANCES ON:
DECIMALS ±.020
ANGLES ±

MATERIAL
INSERT: 3
SHELLS & SHIELDS: 4
JACKSCREWS: ZINC ALLOY

FINISH
SHELLS & SHIELDS: 5
JACKSCREWS: 6

CONTRACT NO
DR 4-28-87
CHK 4-30-87
APPD 4-30-87
APPD 4/30/87
DSGN APPD
OTHER APPD

AMP | AMP INCORPORATED Harrisburg, Pa. 17105

NAME
SHIELDING ENCLOSURE KIT, PLUG, SIZE 5, 78 POSN, AMPLIMITE® HDP-22

SIZE	FSCM NO	DRAWING NO
C	00779	748477

SCALE 2:1 SHEET 1 OF 1

AMP 1471-6 REV 2-81

CUSTOMER DRAWING