DRAWING MADE IN THIRD ANGLE PROJECTION
THIS DRAWING IS UNPUBLISHED. RELEASED FOR PUBLICATION ,19 .
© COPYRIGHT 19 BY AMP INCORPORATED. ALL INTERNATIONAL RIGHTS RESERVED.

LOC	DIST
BD	77

REVISIONS

P	F	ZONE	LTR	DESCRIPTION	DATE	APPD
			0	RLSE -1 NPR 5160, WAS 94-4913-7-1	07/29/94	–
			A	REV PER EC 0G40-448-98	01 MAR 99	RT

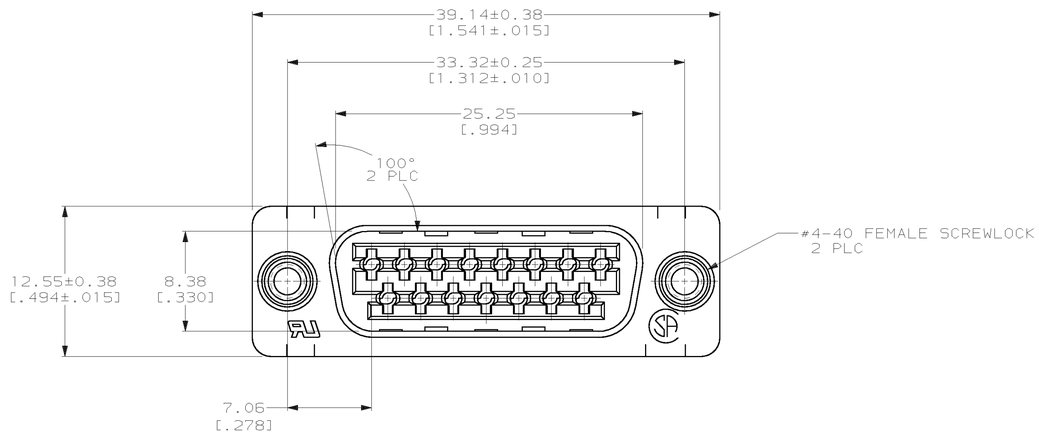

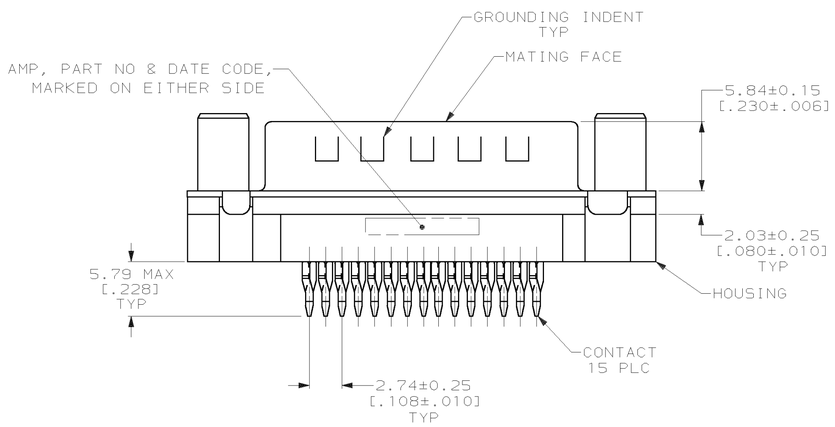

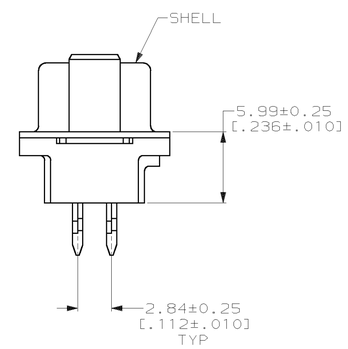

1. RECOMMENDATIONS FOR 2.36 [.093] MIN THICK PC BOARD:
   A. HOLE DIAMETER AFTER DRILLING = 1.151±0.025 [.0453±.0010].
   B. HOLE DIAMETER AFTER TIN-LEAD PLATING = 0.94 [.037]-1.09 [.043].
   C. HOLE DIAMETER AFTER REFLOW = 0.91 [.036]-1.09 [.043].
   D. PC BOARD PLATING TO BE 0.76µm [.000300] MIN TIN-LEAD OVER 0.05±0.03 [.002±.001] COPPER.
2. NYLON, UL 94V-0 RATED, BLACK.
3. COPPER ALLOY PER ASTM B122.
4. CARBON STEEL PER ASTM A109.
5. GOLD PLATING PER MIL-G-45204; NICKEL PLATING PER QQ-N-290; TIN PLATING PER MIL-T-10727; COPPER PLATING PER MIL-C-14550.
6. 5.08µm [.000200] MIN TIN OVER 2.54µm [.000100] MIN COPPER.
7. GOLD PLATED FOR A LENGTH OF 3.81[.150] MIN FROM MATING END, 0.76µm [.000030] MIN GOLD IN MATED AREA. 2.54µm [.000100] MIN TIN-LEAD FOR A LENGTH OF 5.79[.228] MIN FROM OPPOSITE END, BOTH OVER 1.27µm [.000050] MIN NICKEL.
8. DATUMS AND BASIC DIMENSIONS ESTABLISHED BY CUSTOMER.

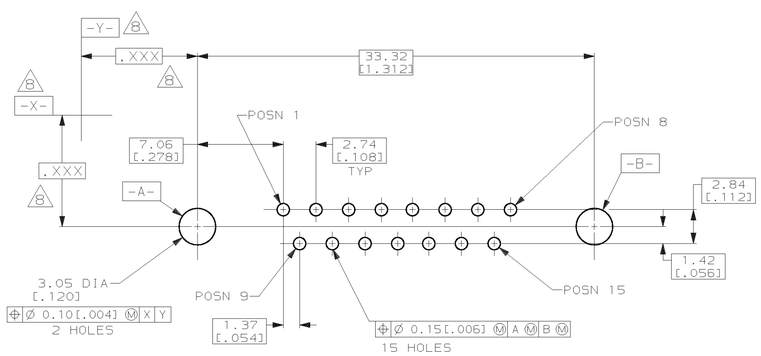

RECOMMENDED PC BOARD LAYOUT 1
CONNECTOR SIDE OF BOARD

THIS DRAWING IS A CONTROLLED DOCUMENT FOR AMP INCORPORATED. IT IS SUBJECT TO CHANGE AND THE CONTROLLING ENGINEERING ORGANIZATION SHOULD BE CONTACTED FOR THE LATEST REVISION.

DO NOT SCALE PRINT. UNLESS SPECIFIED DIMENSIONS IN mm [INCHES] TOLERANCES ON : 2 PLC DEC ± 0.13 [.005] 3 PLC DEC ± - ANGLES ± 2°	DR 07/29/94 D.GELTZ	AMP Incorporated Harrisburg, PA 17105-3608
	CHK 08/04/94 R.STONE	
	APPD 08/05/94 M.PERCHERKE	NAME PLUG ASSEMBLY, SIZE 2, 15 POSITION, MEDIUM PROFILE, ACTION PIN™, AMPLIMITE™ HD-20
MATERIAL HOUSING: 2 CONTACTS: 3 SHELL: 4 SCREWLOCKS: ZINC	APPD 08/17/94 W.PARKER	
	PRODUCT SPEC 108-40014	
FINISH 5 SHELL: 6 CONTACTS: 7	APPLICATION SPEC 114-40026	SIZE D / CAGE CODE 00779 / DRAWING NO C-787177
	WEIGHT –	SCALE 4:1 / SHEET 1 OF 1

PART NO 787177-1

CUSTOMER DRAWING